Design and Operations Optimization of Membrane Separation for Flexible Carbon Capture

SCCS Annual Meeting

May 10, 2018

Mengyao Yuan[1], Holger Teichgräber[1], Jennifer Wilcox[2], Adam Brandt[1]

[1]Department of Energy Resources Engineering, Stanford University

[2]Department of Chemical and Biological Engineering, Colorado School of Mines

Flexibility will be required for carbon capture in the energy transition

- Increasing integration of intermittent renewable energy
- Natural gas as a bridge fuel providing flexible generation
  - Natural gas combined cycles have ramp times on order of minutes
- Flexible carbon capture may have economic advantage

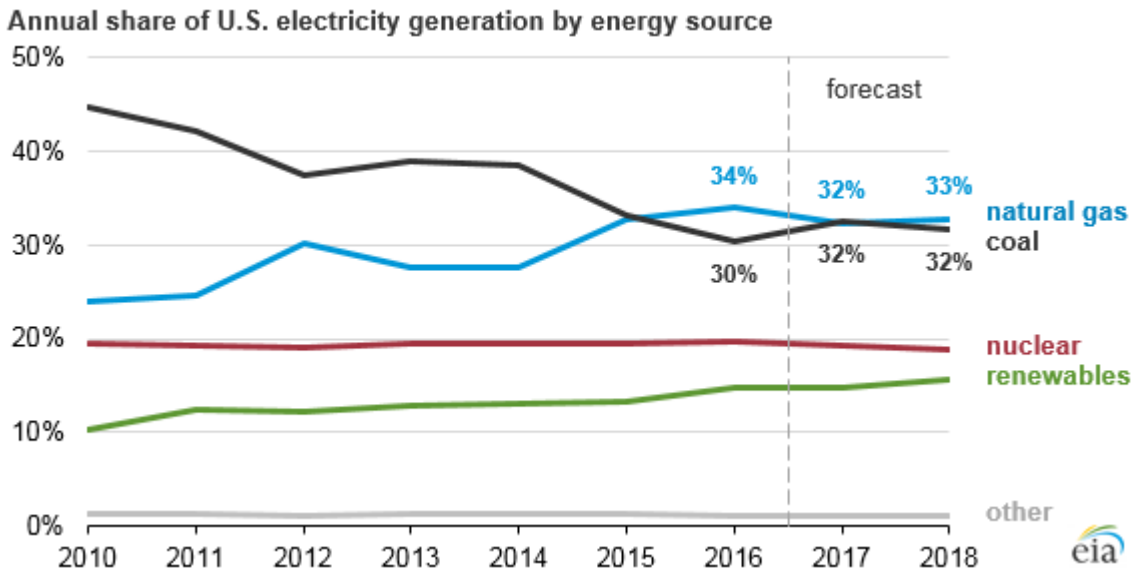

Share of generation by source: US Energy Information Agency (EIA). "Natural Gas Prices." 2017

Membrane separation as a competitive technology for flexible carbon capture

- **Flexible operations by changing pressures**
  - Fast response times compatible with natural gas power generation

Pilot membrane plant: White et al., *J. Membr. Sci.*, 2015

Membrane separation as a competitive technology for flexible carbon capture

- **Flexible operations by changing pressures**
  - Fast response times compatible with natural gas power generation

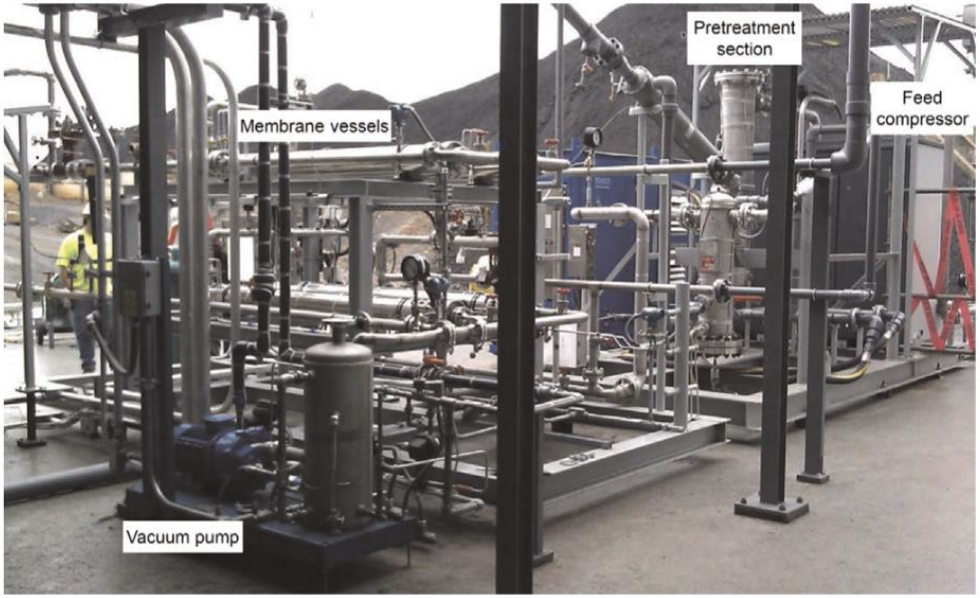

- Pilot membrane capture plant developed by Membrane Technology & Research, Inc.
- 1 ton/day capacity
- 15 mins cold start

Pilot membrane plant: White et al., *J. Membr. Sci.*, 2015

Membrane separation as a competitive technology for flexible carbon capture

- **Flexible operations by changing pressures**
  - Fast response times compatible with natural gas power generation
- **Other advantages of membrane separation**
  - Competitive energy use
  - Smaller footprint
  - Environmentally benign

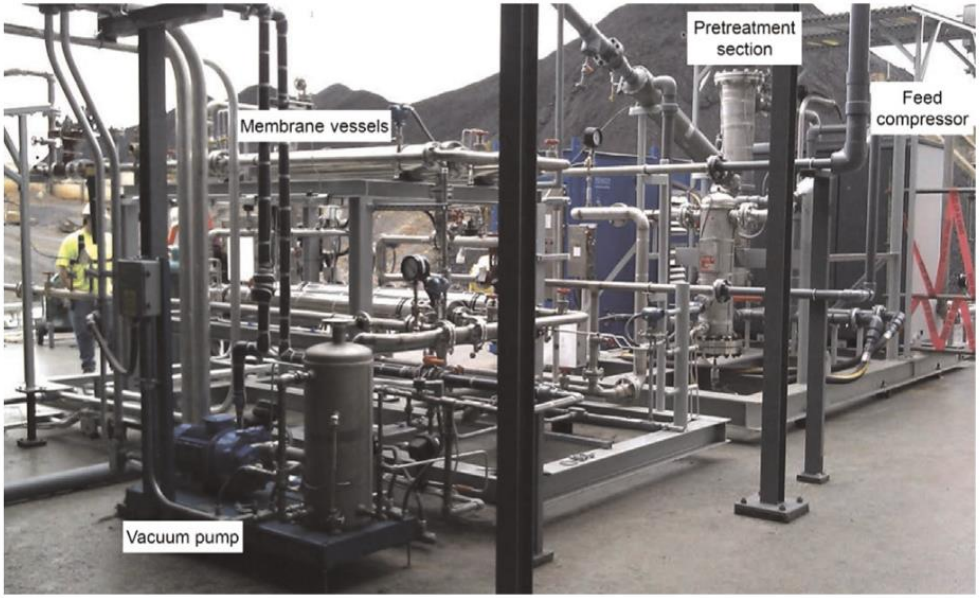

- Pilot membrane capture plant developed by Membrane Technology & Research, Inc.
- 1 ton/day capacity
- 15 mins cold start

Pilot membrane plant: White et al., *J. Membr. Sci.*, 2015

Project goal

- **Demonstrate methodology for joint design and operations optimization of membrane-based flexible carbon capture from natural gas combined cycle**

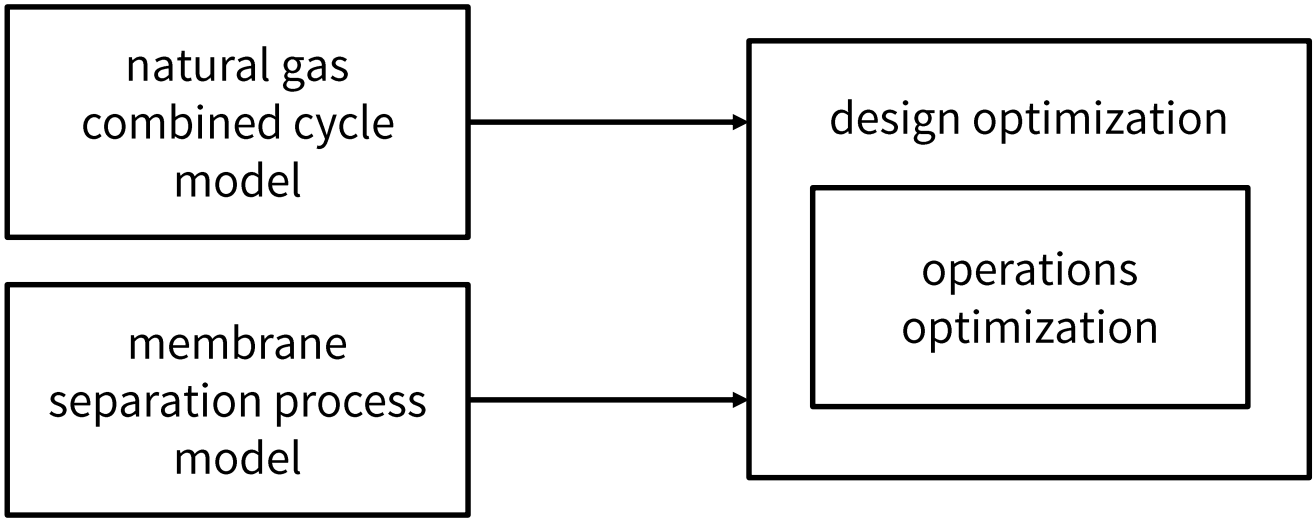

System overview

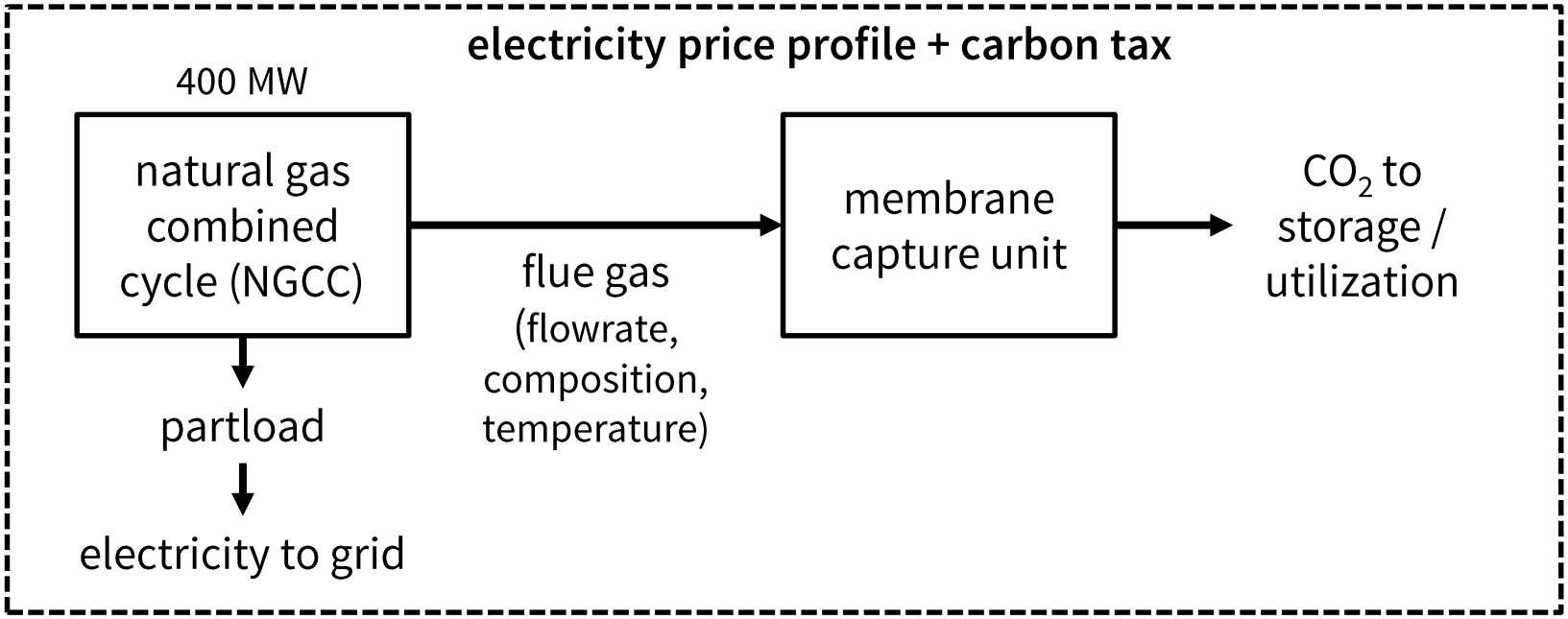

HyPPO model: Kang et al., *Int. J. Greenhouse Gas Control*, 2014; Brodrick et al., *Energy*, 2015; Kang et al., *Int. J. Greenhouse Gas Control*, 2016; Kang et al., *Appl. Energy*, 2016; Teichgräber et al., *Energy*, 2017

System overview

- **Natural gas combined cycle modeled in the Hybrid Power Plant Optimization (HyPPO) model**
  - Developed at Stanford University for modeling and optimization of flexible and renewable-integrated power systems

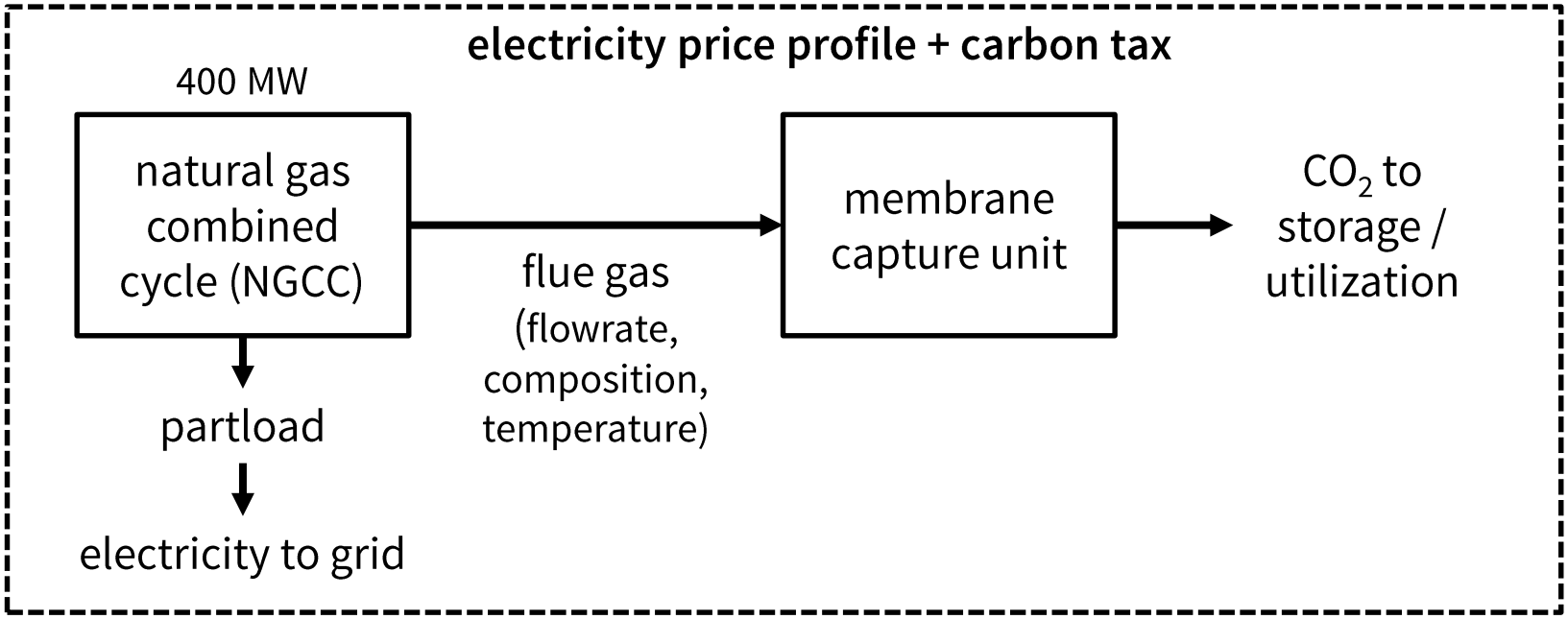

HyPPO model: Kang et al., *Int. J. Greenhouse Gas Control*, 2014; Brodrick et al., *Energy*, 2015; Kang et al., *Int. J. Greenhouse Gas Control*, 2016; Kang et al., *Appl. Energy*, 2016; Teichgräber et al., *Energy*, 2017

Membrane modeling

- **Membrane mass balance and area: crossflow model**
- **Compression and expansion: adiabatic processes**

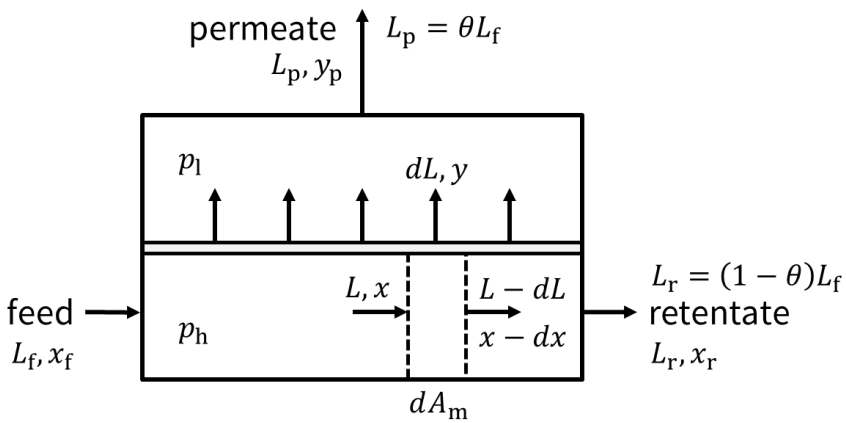

Crossflow model: Geankoplis, *Transport Processes and Separation Process Principles*, 2013

Membrane modeling

- **Membrane mass balance and area: crossflow model**
- **Compression and expansion: adiabatic processes**

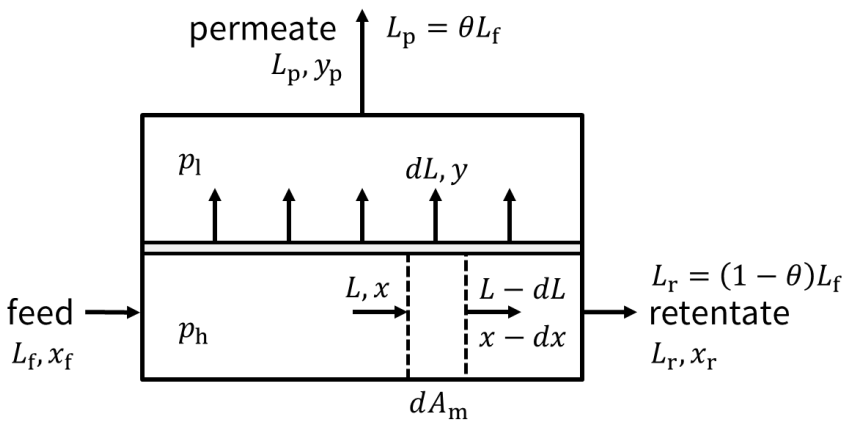

$$\frac{(1-\theta^*)(1-x)}{(1-x_f)} = \left(\frac{u_f - E/D}{u - E/D}\right)^R \left(\frac{u_f - \alpha + F}{u - \alpha + F}\right)^S \left(\frac{u_f - F}{u - F}\right)^T$$

$$A_m = \frac{L_f}{p_h \bar{P}_B} \int_{i_r}^{i_f} \frac{(1-\theta^*)(1-x)di}{(f_i - i)\left[\frac{1}{1+i} - \frac{1}{r(1+f_i)}\right]}$$

Crossflow model: Geankoplis, *Transport Processes and Separation Process Principles*, 2013

$$\theta^* = 1 - \frac{L}{L_f}$$

$$i = \frac{x}{1-x}$$

$$u = -Di + (D^2 i^2 + 2Ei + F^2)^{0.5}$$

$$D = 0.5\left[\frac{1-\alpha}{r} + \alpha\right]$$

$$E = \frac{\alpha}{2} - DF$$

$$F = -0.5\left[\frac{1-\alpha}{r} - 1\right]$$

$$R = \frac{1}{2D-1}$$

$$S = \frac{\alpha(D-1) + F}{(2D-1)(\alpha/2 - F)}$$

$$T = \frac{1}{1 - D - E/F}$$

$$f_i = (Di - F) + (D^2 i^2 + 2Ei + F^2)^{0.5}$$

Membrane modeling

- **Membrane mass balance and area: crossflow model**
- **Compression and expansion: adiabatic processes**

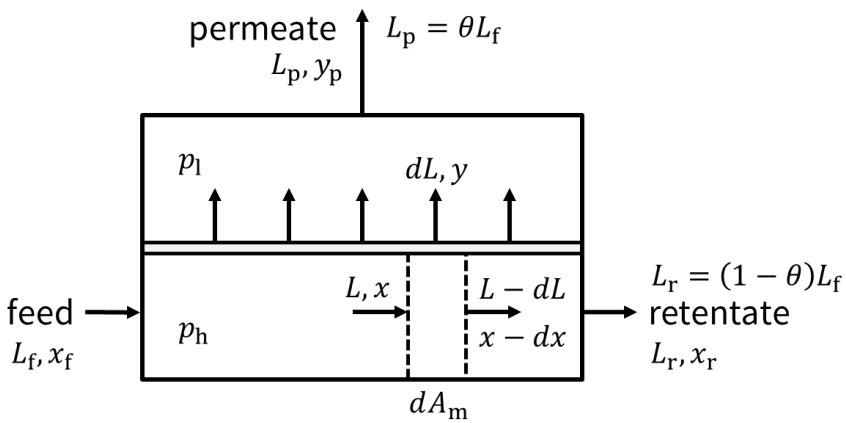

$$\frac{(1-\theta^*)(1-x)}{(1-x_f)} = \left(\frac{u_f - E/D}{u - E/D}\right)^R \left(\frac{u_f - \alpha + F}{u - \alpha + F}\right)^S \left(\frac{u_f - F}{u - F}\right)^T$$

$$A_m = \frac{L_f}{p_h \bar{P}_B} \int_{i_r}^{i_f} \frac{(1-\theta^*)(1-x)di}{(f_i - i)\left[\frac{1}{1+i} - \frac{1}{r(1+f_i)}\right]}$$

Crossflow model: Geankoplis, *Transport Processes and Separation Process Principles*, 2013

$$\theta^* = 1 - \frac{L}{L_f}$$

$$i = \frac{x}{1-x}$$

$$u = -Di + (D^2 i^2 + 2Ei + F^2)^{0.5}$$

$$D = 0.5\left[\frac{1-\alpha}{r} + \alpha\right]$$

$$E = \frac{\alpha}{2} - DF$$

$$F = -0.5\left[\frac{1-\alpha}{r} - 1\right]$$

$$R = \frac{1}{2D-1}$$

$$S = \frac{\alpha(D-1) + F}{(2D-1)(\alpha/2 - F)}$$

$$T = \frac{1}{1 - D - E/F}$$

$$f_i = (Di - F) + (D^2 i^2 + 2Ei + F^2)^{0.5}$$

Highly nonlinear equations → challenge for optimization

Two-stage membrane cascade overview

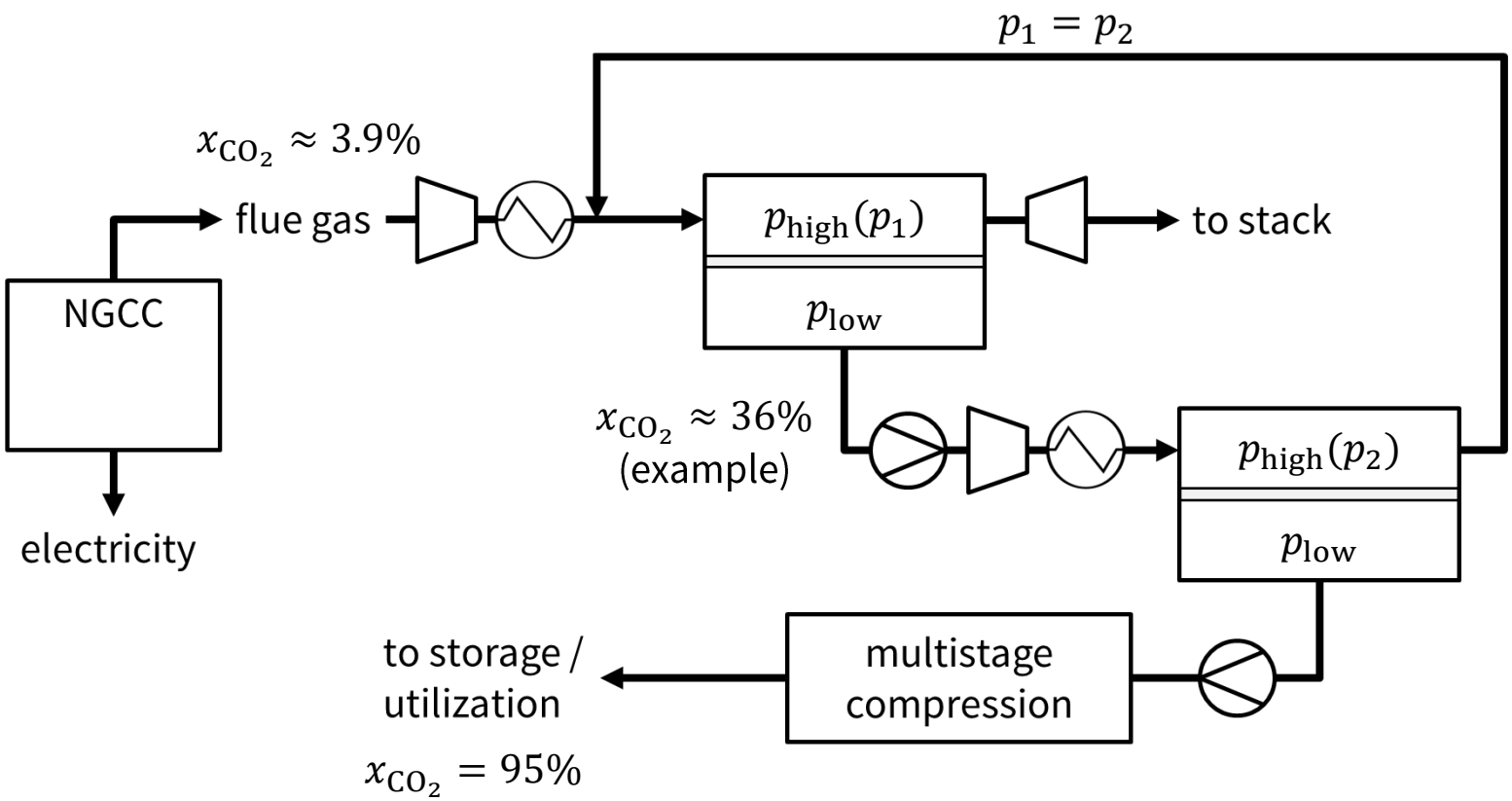

Overview of operational decision variables

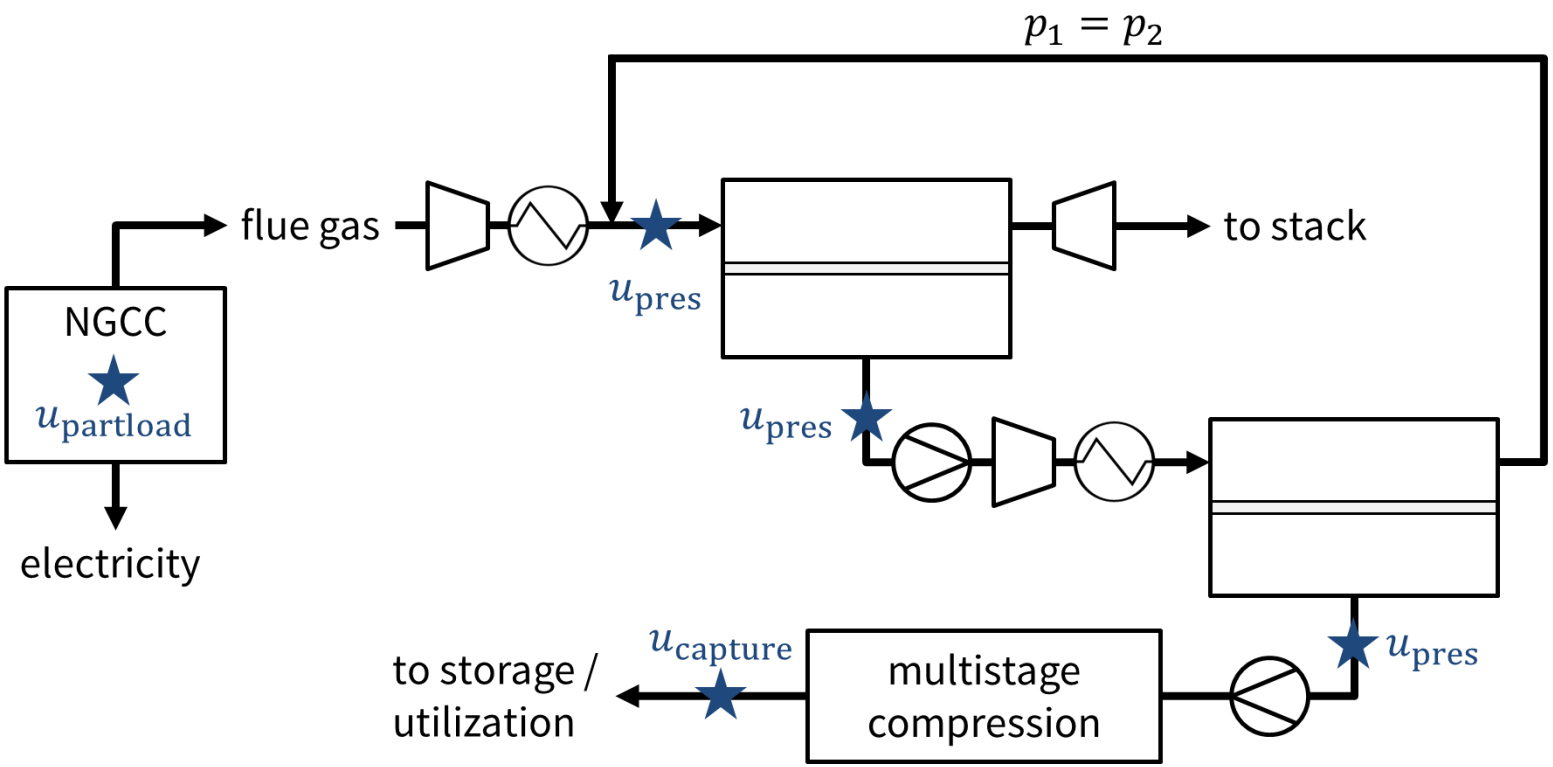

design decision variables

operational decision variables

Overview of possible design decision variables

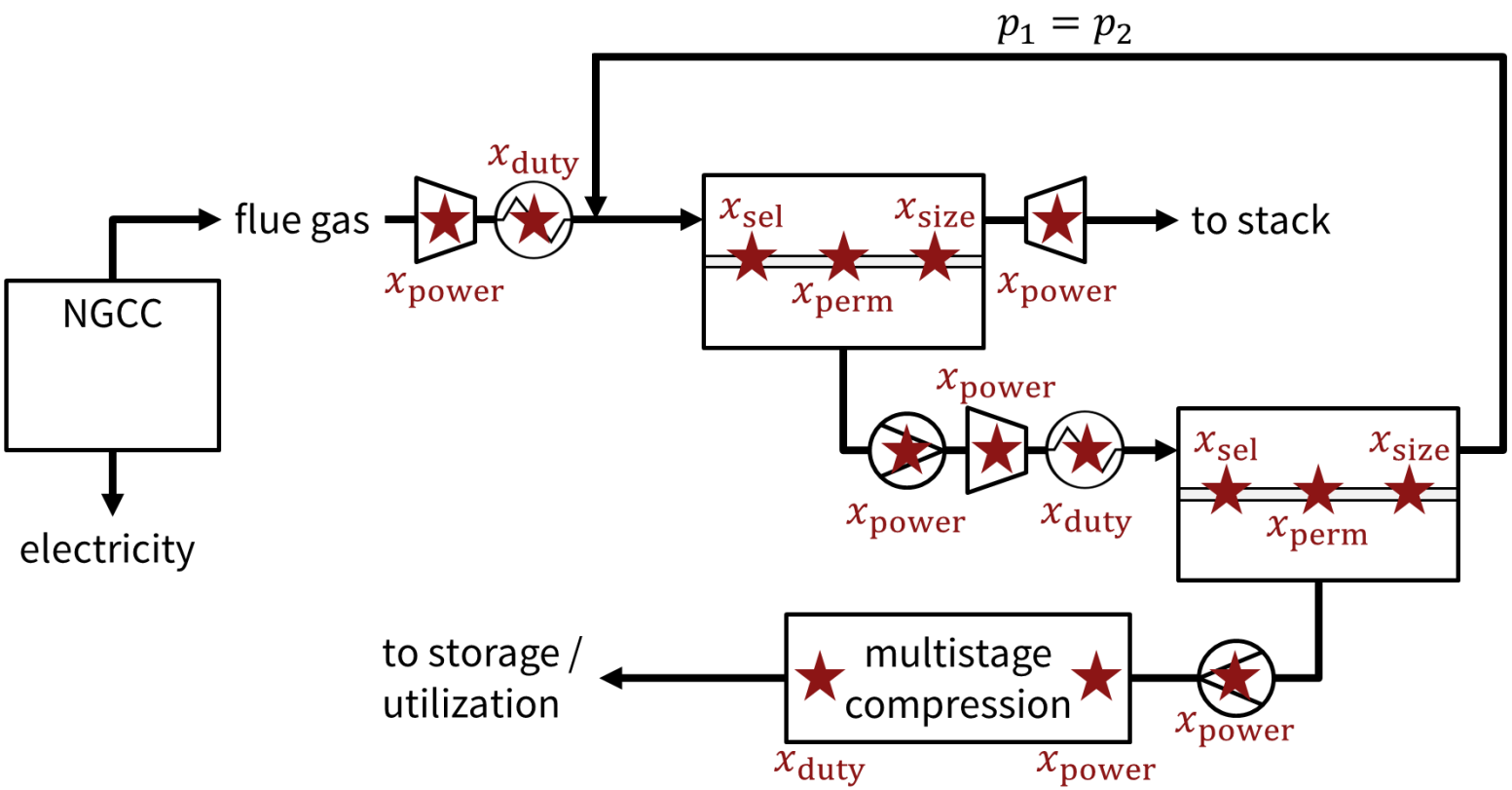

★ design decision variables

★ operational decision variables

Overview of possible design decision variables

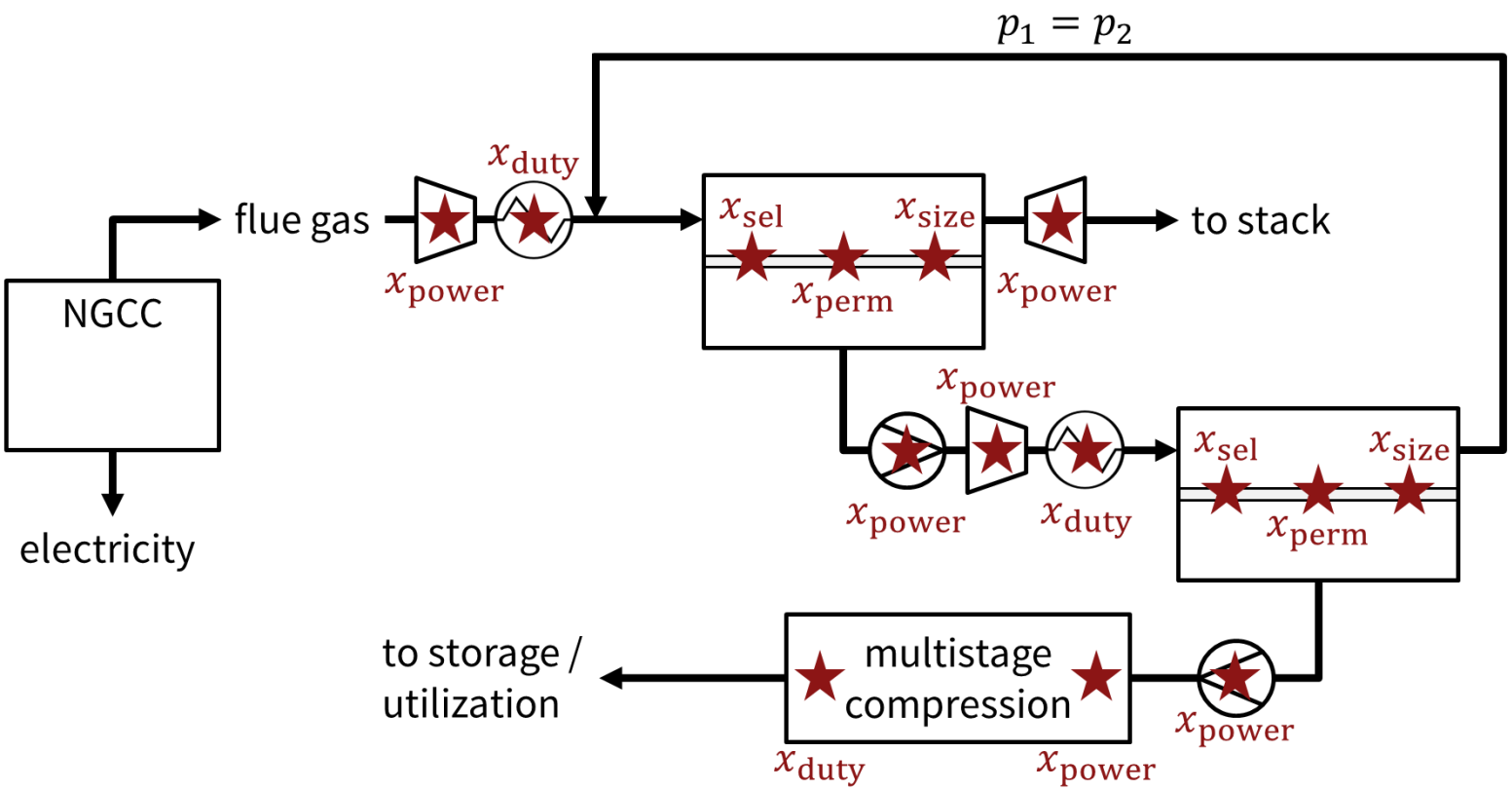

★ design decision variables
★ operational decision variables

Computation time increases with number of decision variables
→ Focus on most important design decision variables

Decision variables evaluated

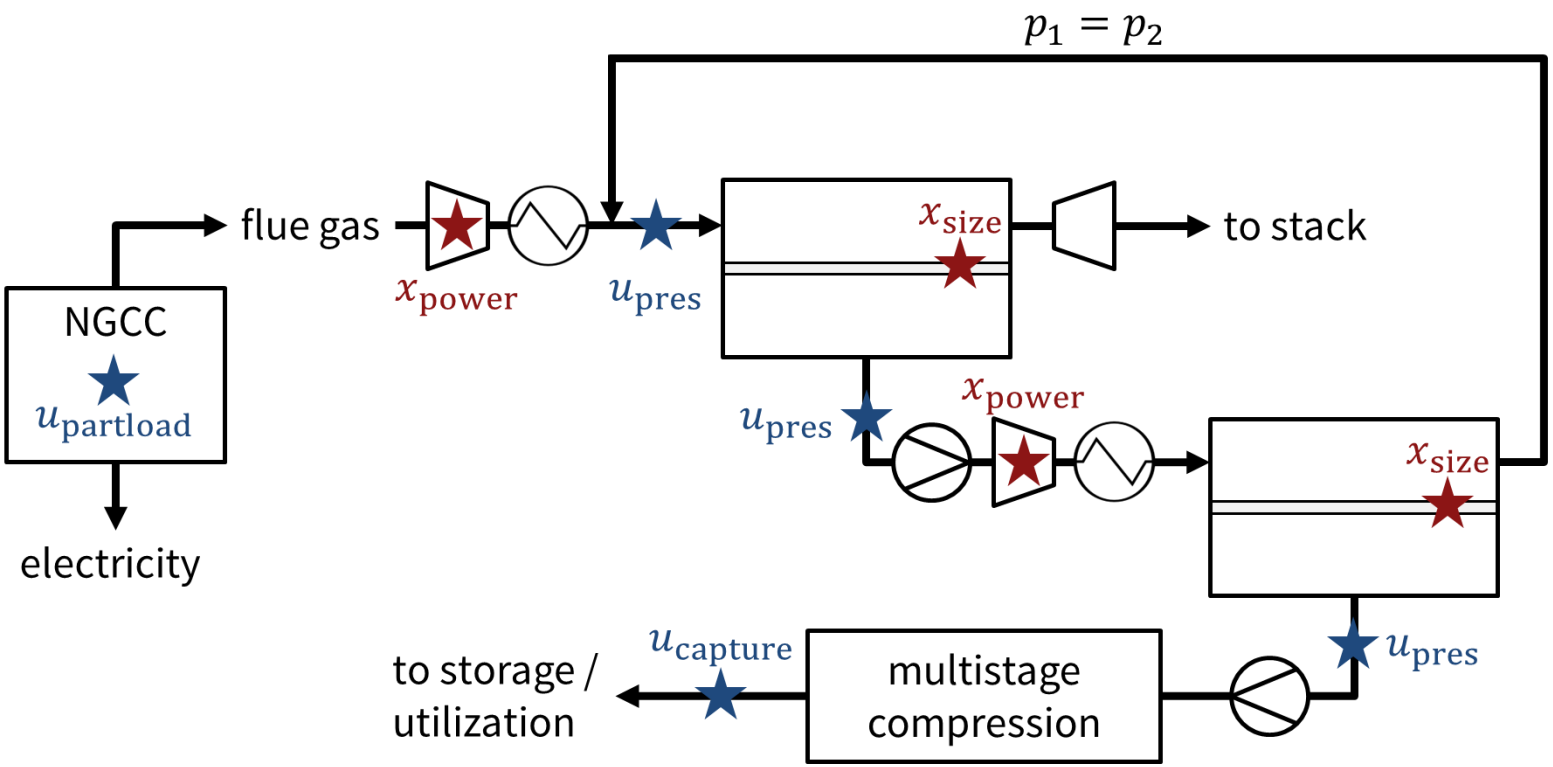

★ design decision variables
★ operational decision variables

Feed compressor sizes and membrane areas dominate capital cost

Objective function

- **Maximize net present value (NPV)**

$$\max_{\boldsymbol{x} \in X, \boldsymbol{u} \in U} \mathrm{NPV}(\boldsymbol{x}, \boldsymbol{u})$$

$$\mathrm{NPV} = -C(\boldsymbol{x}) + \sum_{t=1}^{n_{\mathrm{years}}} \frac{P(\boldsymbol{x}, \boldsymbol{u})}{(1+r)^t}$$

- **Subject to design and operational constraints**

$$h_{\mathrm{des}}(\boldsymbol{x}, \boldsymbol{u}) \leq 0, h_{\mathrm{op}}(\boldsymbol{x}, \boldsymbol{u}) \leq 0$$

$\boldsymbol{x}$ = design decision variables

$\boldsymbol{u}$ = operational decision variables

Objective function

- **Maximize net present value (NPV)**

$$\max_{\boldsymbol{x}\in X, \boldsymbol{u}\in U} \mathrm{NPV}(\boldsymbol{x}, \boldsymbol{u})$$

$$\mathrm{NPV} = \underbrace{\boxed{-C(\boldsymbol{x})}}_{\text{capital cost}} + \underbrace{\boxed{\sum_{t=1}^{n_{\text{years}}} \frac{P(\boldsymbol{x}, \boldsymbol{u})}{(1+r)^t}}}_{\text{profit}}$$

- **Subject to design and operational constraints**

$$h_{\text{des}}(\boldsymbol{x}, \boldsymbol{u}) \leq 0, h_{\text{op}}(\boldsymbol{x}, \boldsymbol{u}) \leq 0$$

$\boldsymbol{x}$ = design decision variables

$\boldsymbol{u}$ = operational decision variables

Optimization framework

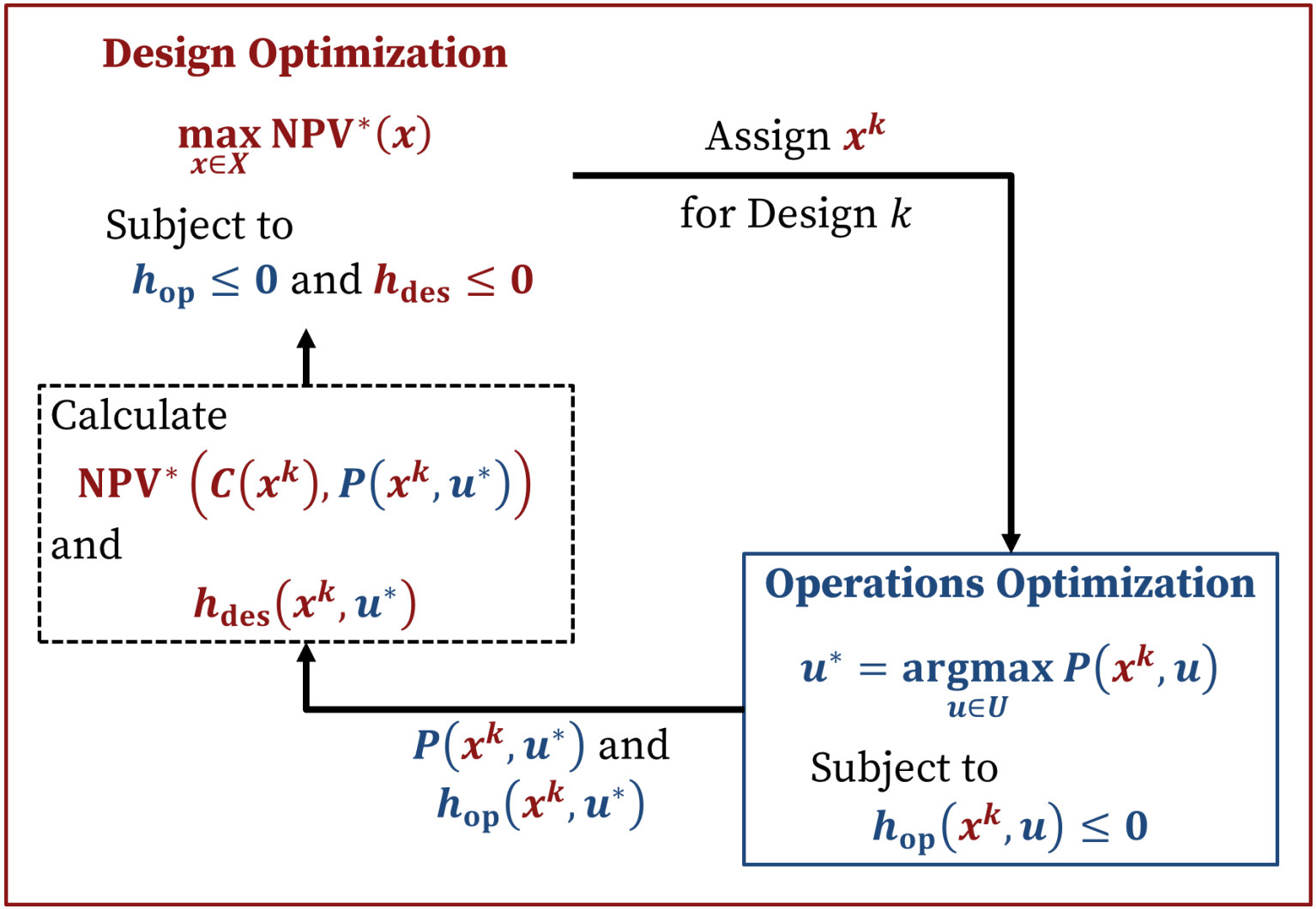

Framework adapted from Brodrick et al., *Energy*, 2015

Timesteps and electricity prices

- **Timesteps are characterized by different electricity prices and can be evaluated independently**

Electricity prices: California ISO. "Open Access Same-time Information System (OASIS)."

Timesteps and electricity prices

- **Timesteps are characterized by different electricity prices and can be evaluated independently**
- **Synthetic electricity price profile**
  - 2015 hourly prices from California ISO "Stanford node"
  - K-means clustering to generate 6 representative electricity prices (timesteps) and associated weights (# hours in a year)

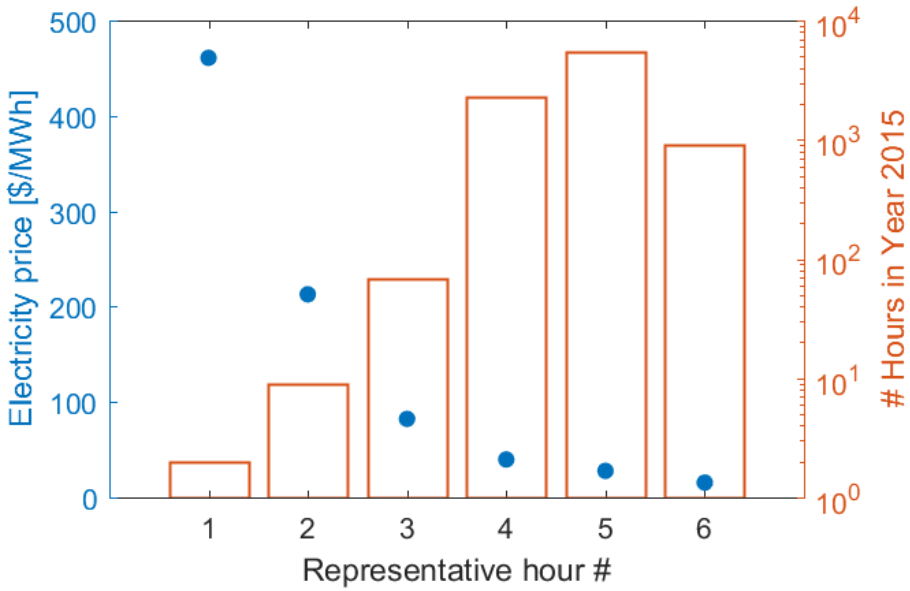

Electricity prices: California ISO. "Open Access Same-time Information System (OASIS)."

Timesteps and electricity prices

- **Timesteps are characterized by different electricity prices and can be evaluated independently**
- **Synthetic electricity price profile**
  - 2015 hourly prices from California ISO "Stanford node"
  - K-means clustering to generate 6 representative electricity prices (timesteps) and associated weights (# hours in a year)

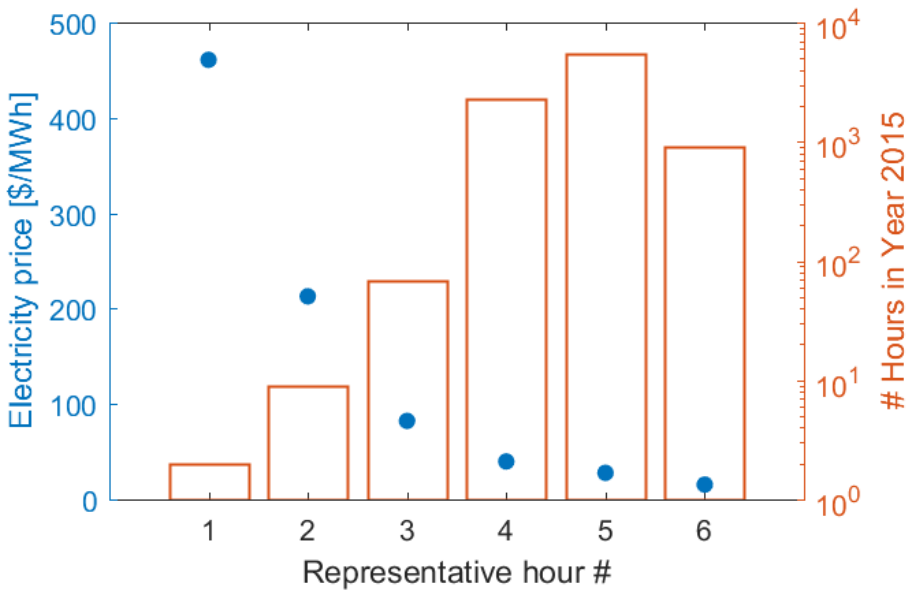

1 × electricity prices → negative NPV without capture unit

⇩

Use 2 × electricity prices

Electricity prices: California ISO. "Open Access Same-time Information System (OASIS)."

Multistart operations optimization

- **Multistart optimization to ensure repeatability**
  - 10–50 starting points for each given partload and design
  - Stop when same solution found 5 times or 50 runs completed

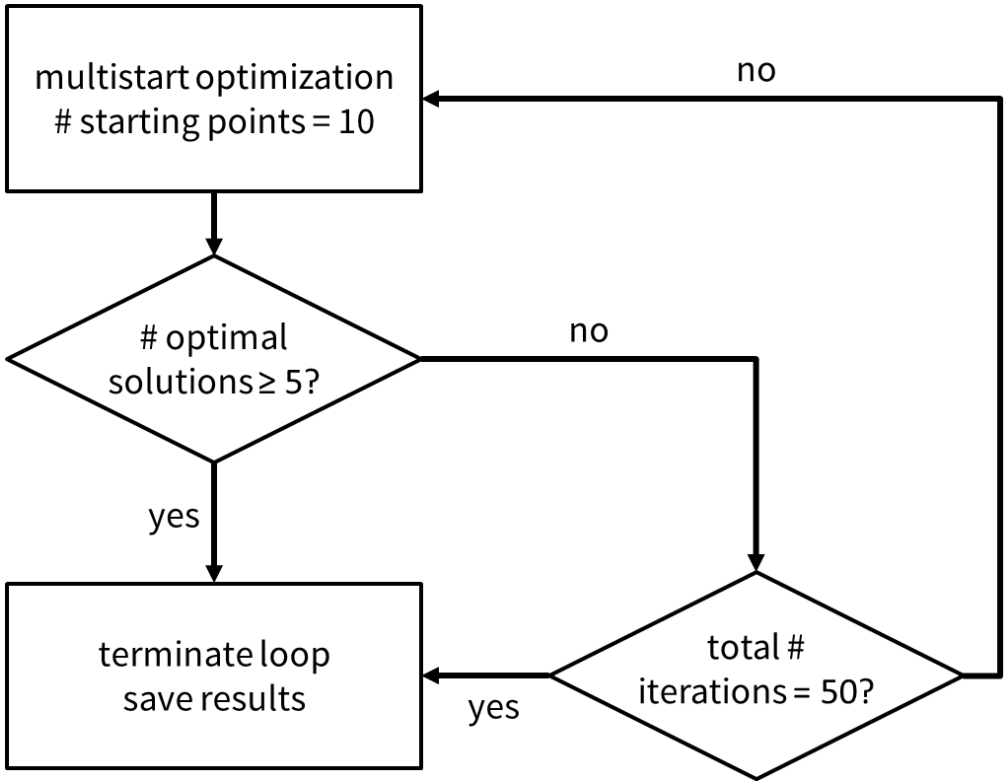

Operational decision variables and computation time

- **Computation time (single core)**
  - (15–20 seconds/starting point) × (10–50 starting points/partload) × (8 partloads/timestep) = 0.3–2 hours/timestep
  - (0.3–2 hours/timestep) × (6 timesteps/design) = 2–8 hours/design

Variable	Unit	Lower bound	Upper bound	Type
Combined cycle partload	-	0 (shutdown)	1 (full load)	Discrete
Feed-side pressure for each stage	bar	1.013	10	Continuous
1st-stage permeate-side pressure	bar	0.2	1.013	Continuous
2nd-stage permeate-side pressure	bar	0.2	1.013	Continuous
Capture rate	%	0	95	Continuous

Design decision variables

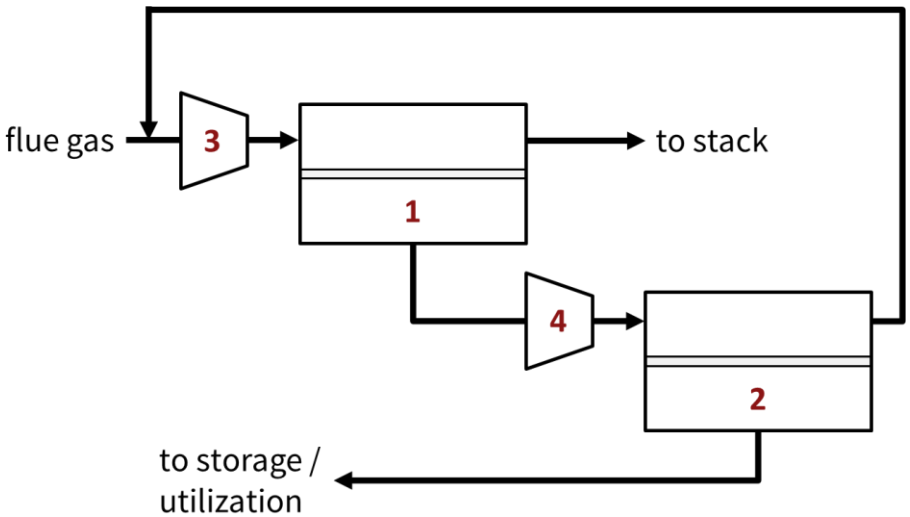

- **Fixed membrane properties**
  - Selectivity = 50
  - Permeance = 1000 GPU

#	Variable	Unit	Values		
1	1st-stage membrane area	m^2	0.25×10^6	0.5×10^6	1×10^6
2	2nd-stage membrane area	m^2	0.5×10^4	1×10^4	2×10^4
3	1st-stage feed compressor size	MW	100	150	200
4	2nd-stage feed compressor size	MW	10	25	50

Design decision variables

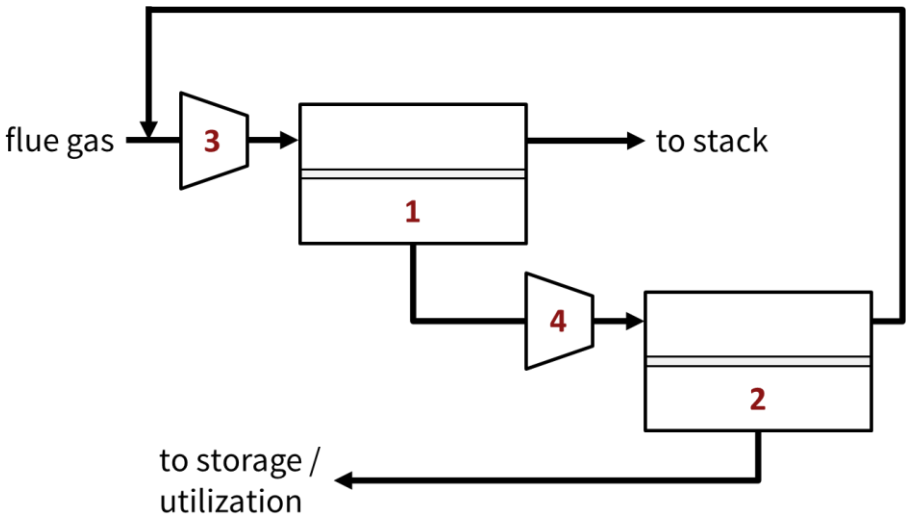

- **Fixed membrane properties**
  - Selectivity = 50
  - Permeance = 1000 GPU
- **81 design combinations, can be easily expanded**

#	Variable	Unit	Values		
1	1st-stage membrane area	m^2	0.25×10^6	0.5×10^6	1×10^6
2	2nd-stage membrane area	m^2	0.5×10^4	1×10^4	2×10^4
3	1st-stage feed compressor size	MW	100	150	200
4	2nd-stage feed compressor size	MW	10	25	50
			S	**M**	**L**

Results: Optimized NPVs

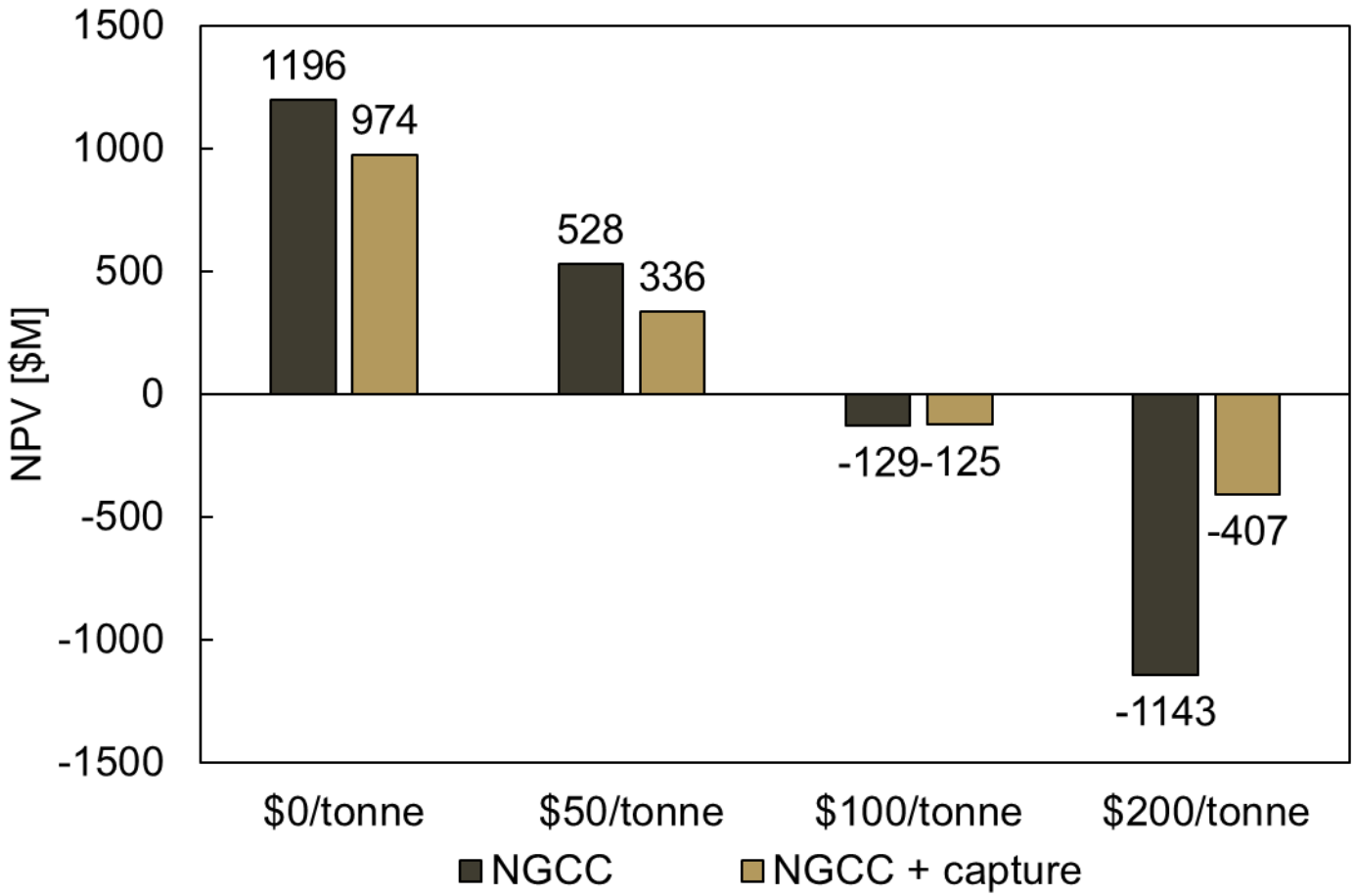

Breakeven carbon price close to ~$100/tonne

Results: Optimized design decision variables

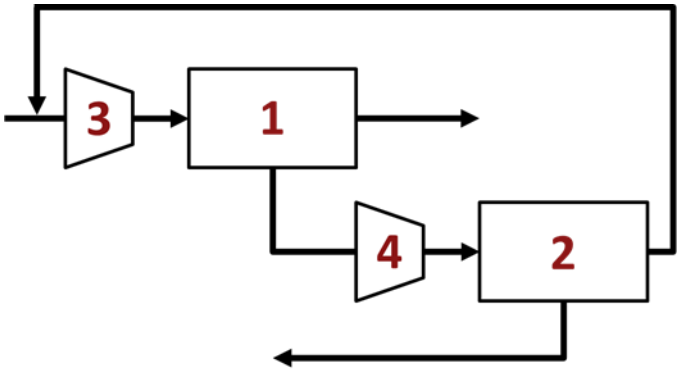

design decision variables

$0/tonne

	S	M	L
#1	■		
#2	■		
#3	■		
#4	■		

$50/tonne

	S	M	L
#1	■		
#2		■	
#3	■		
#4	■		

$100/tonne

	S	M	L
#1		■	
#2			■
#3		■	
#4		■	

$200/tonne

	S	M	L
#1		■	
#2			■
#3		■	
#4			■

Results: Optimized partload and capture rate, carbon price = $0/tonne

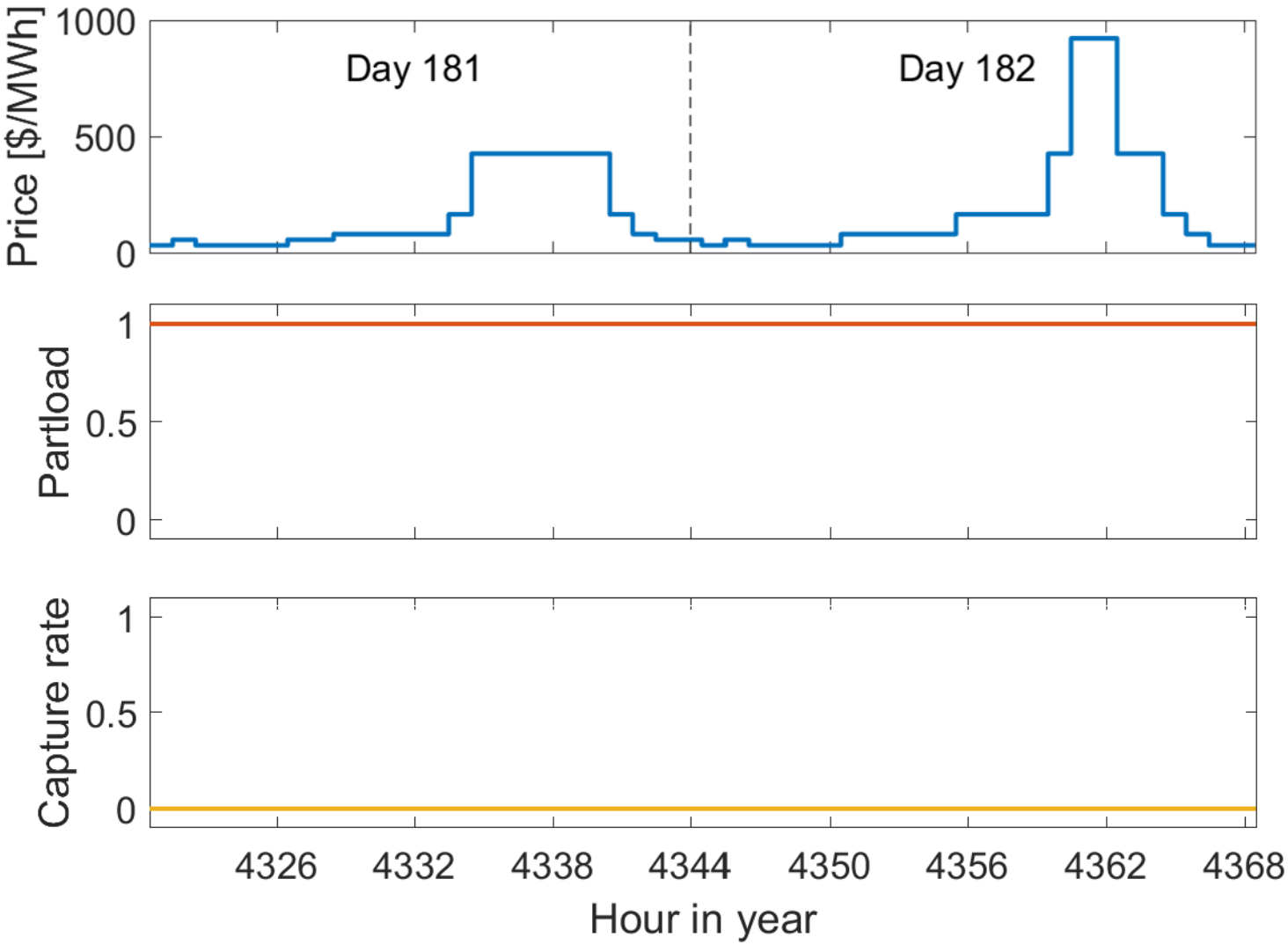

Results: Optimized partload and capture rate, carbon price = $0/tonne

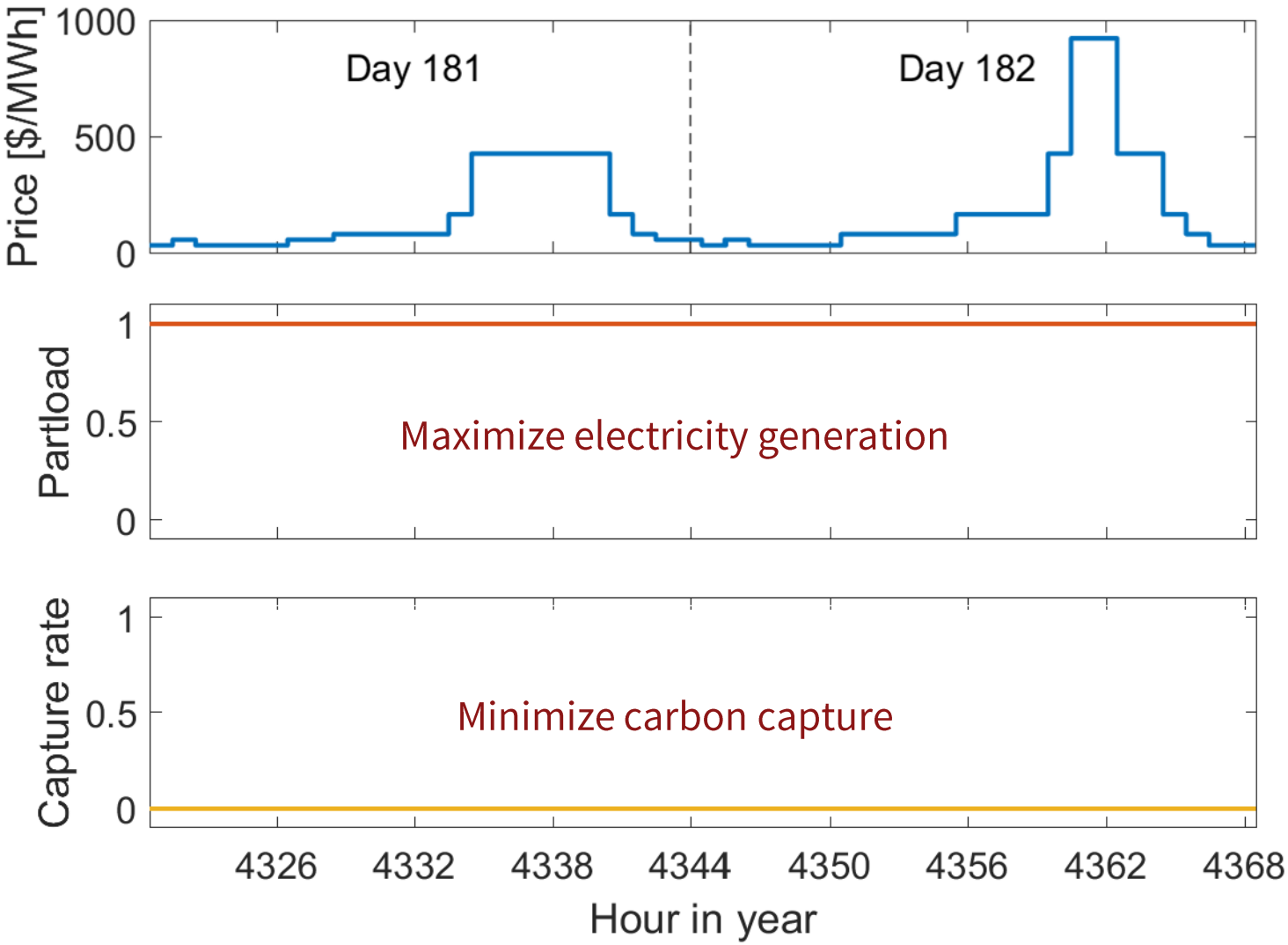

Results: Optimized partload and capture rate, carbon price = $50/tonne

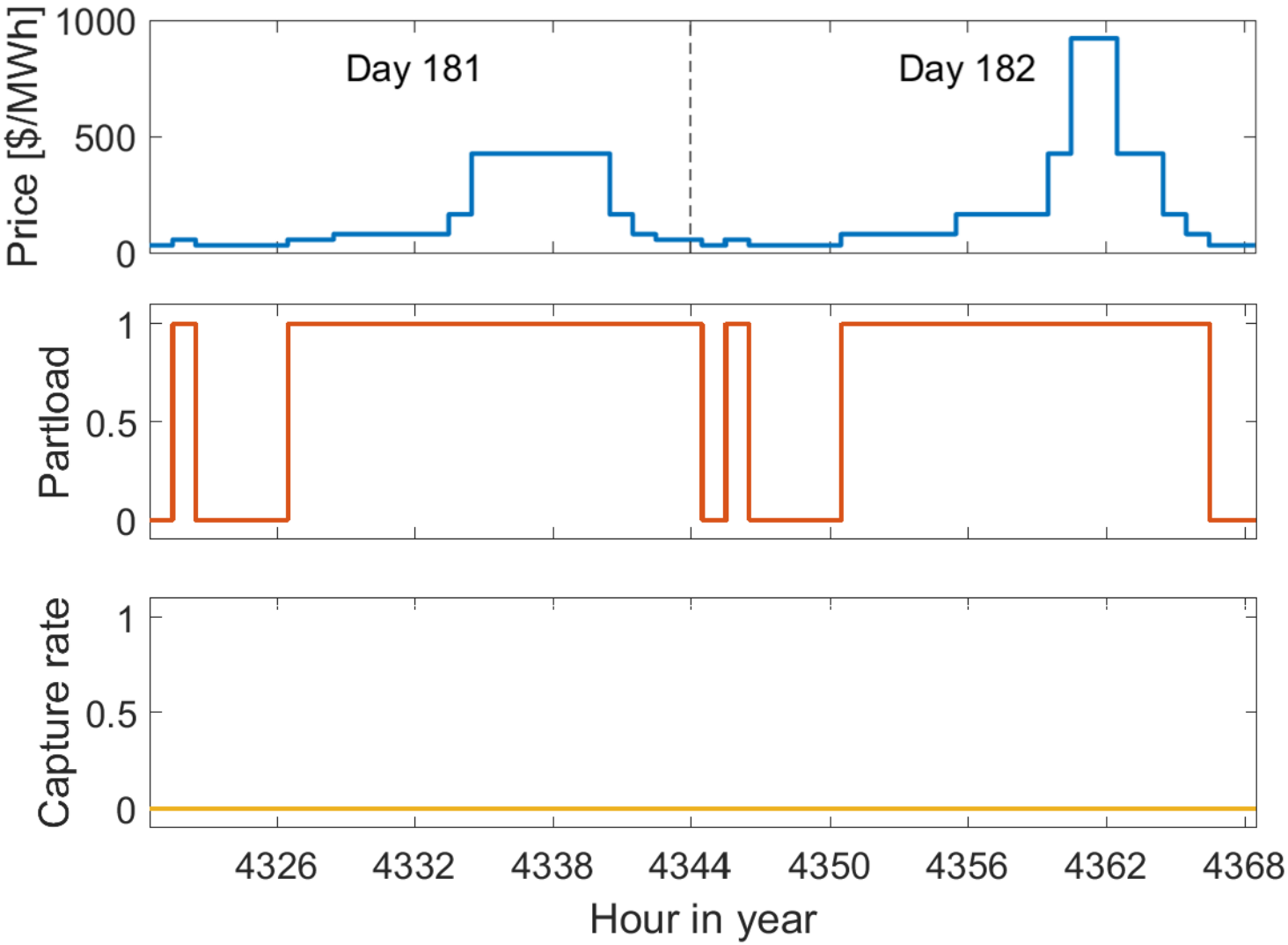

Results: Optimized partload and capture rate, carbon price = $100/tonne

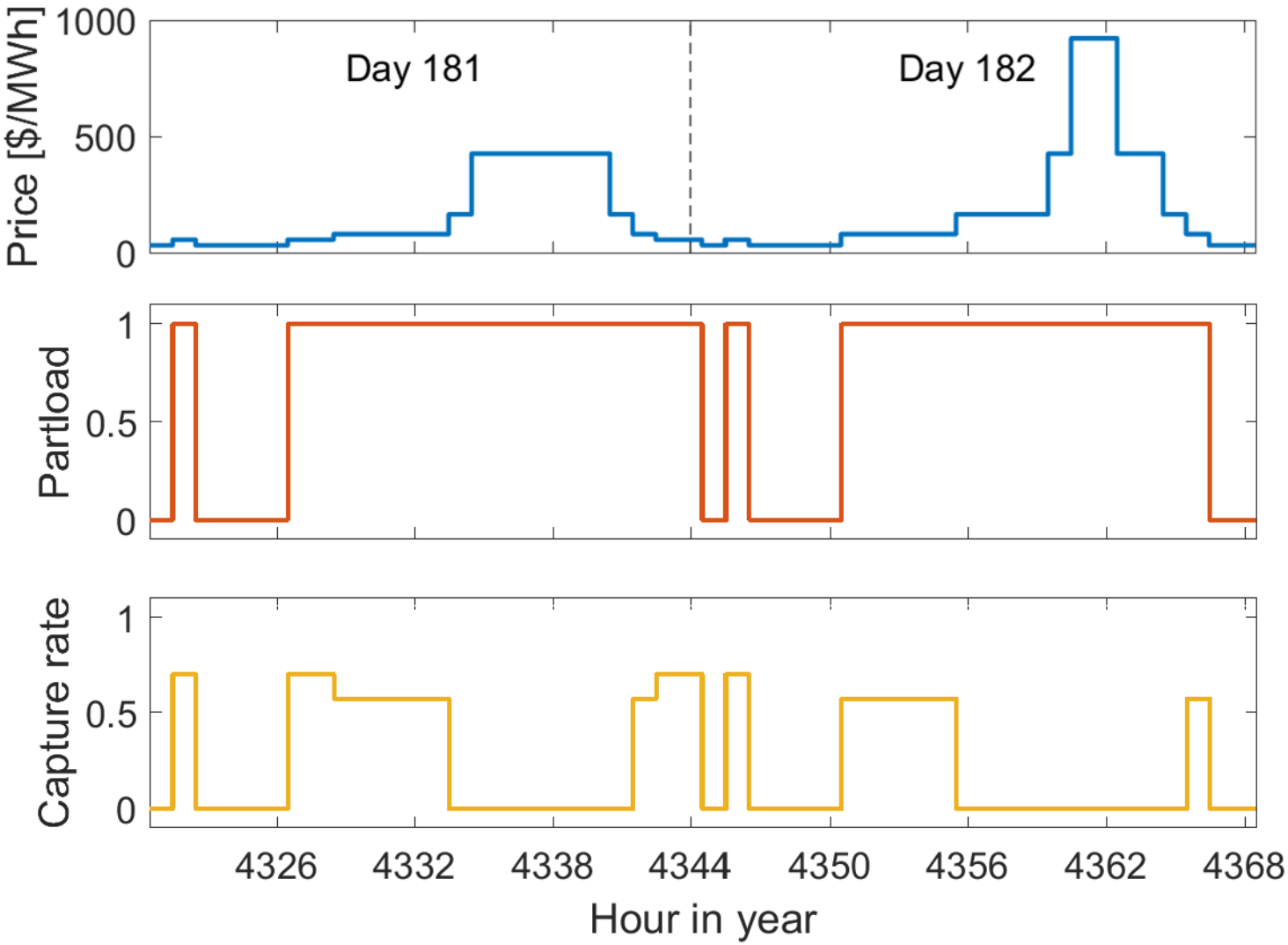

Results: Optimized partload and capture rate, carbon price = $200/tonne

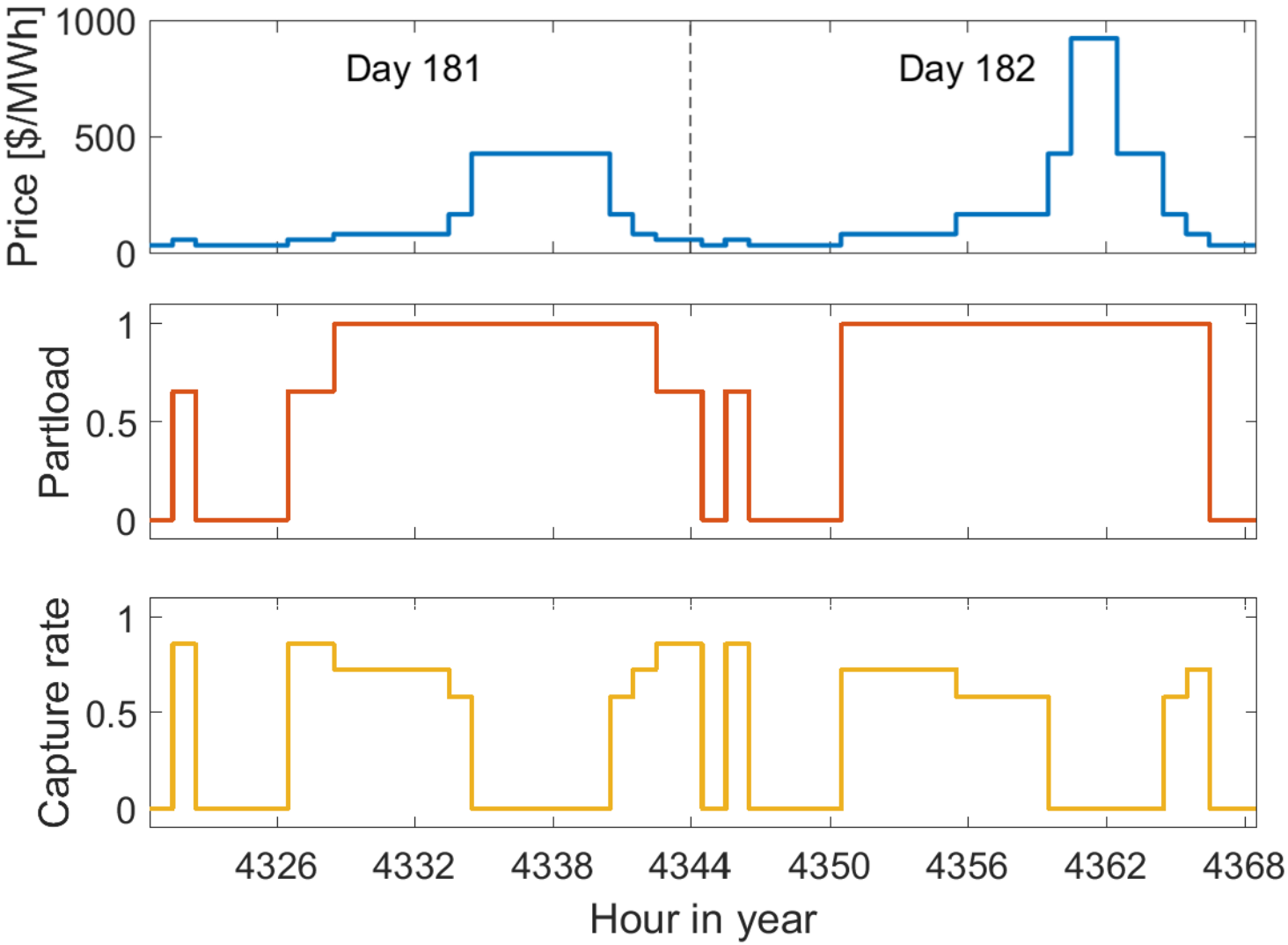

Summary and proposed future work

- **Developed methodology for joint design and operations optimization of membrane-based flexible carbon capture**
  - Optimal system design should balance capital cost and operating cost
  - Optimal operating schedule depends on relative prices of electricity and carbon

Summary and proposed future work

- **Developed methodology for joint design and operations optimization of membrane-based flexible carbon capture**
  - Optimal system design should balance capital cost and operating cost
  - Optimal operating schedule depends on relative prices of electricity and carbon
- **Methodology developed in this study is robust and can be used to explore different scenarios**
  - New materials and designs to further decrease CO_2 separation cost
  - Guide performance and cost targets for membranes
  - Identify proper emissions regulations (tax or cap)

Thank you!

Questions?

myuan@carnegiescience.edu

References

White, L.S., X. Wei, S. Pande, T. Wu, and T.C. Merkel. "Extended flue gas trials with a membrane-based pilot plant at a one-ton-per-day carbon capture rate." *J. Membr. Sci.* 496 (2015): 48–57.

U.S. Energy Information Administration. 2017. "Natural Gas Prices." https://www.eia.gov/dnav/ng/ng_pri_sum_dcu_nus_a.htm.

Kang, C.A., A.R. Brandt, and L.J. Durlofsky. "Optimizing heat integration in a flexible coal–natural gas power station with CO_2 capture." *Int. J. Greenhouse Gas Control* 31 (2014): 138–152.

Brodrick, P.G., C.A. Kang, A.R. Brandt, and L.J. Durlofsky. "Optimization of carbon-capture-enabled coal-gas-solar power generation." *Energy* 79 (2015): 149–162.

Kang, C.A., A.R. Brandt, and L.J. Durlofsky. "A new carbon capture proxy model for optimizing the design and time-varying operation of a coal-natural gas power station." *Int. J. Greenhouse Gas Control* 48 (2016): 234–252.

Kang, C.A., A.R. Brandt, L.J. Durlofsky, and I. Jayaweera. "Assessment of advanced solvent-based post-combustion CO_2 capture processes using a bi-objective optimization technique." *Appl. Energy* 179 (2016): 1209–1219.

Teichgräber, H., P.G. Brodrick, and A.R. Brandt. "Optimal design and operations of a flexible oxyfuel natural gas plant." *Energy* (2017).

Geankoplis, C.J. 2003. "Chapter 13: Membrane separation processes." In *Transport Processes and Separation Process Principles.* Upper Saddle River, NJ: Prentice Hall Press.

California ISO. "Open Access Same-time Information System (OASIS)." http://oasis.caiso.com/mrioasis/logon.do.

Backup slides

MEMBRANE 101

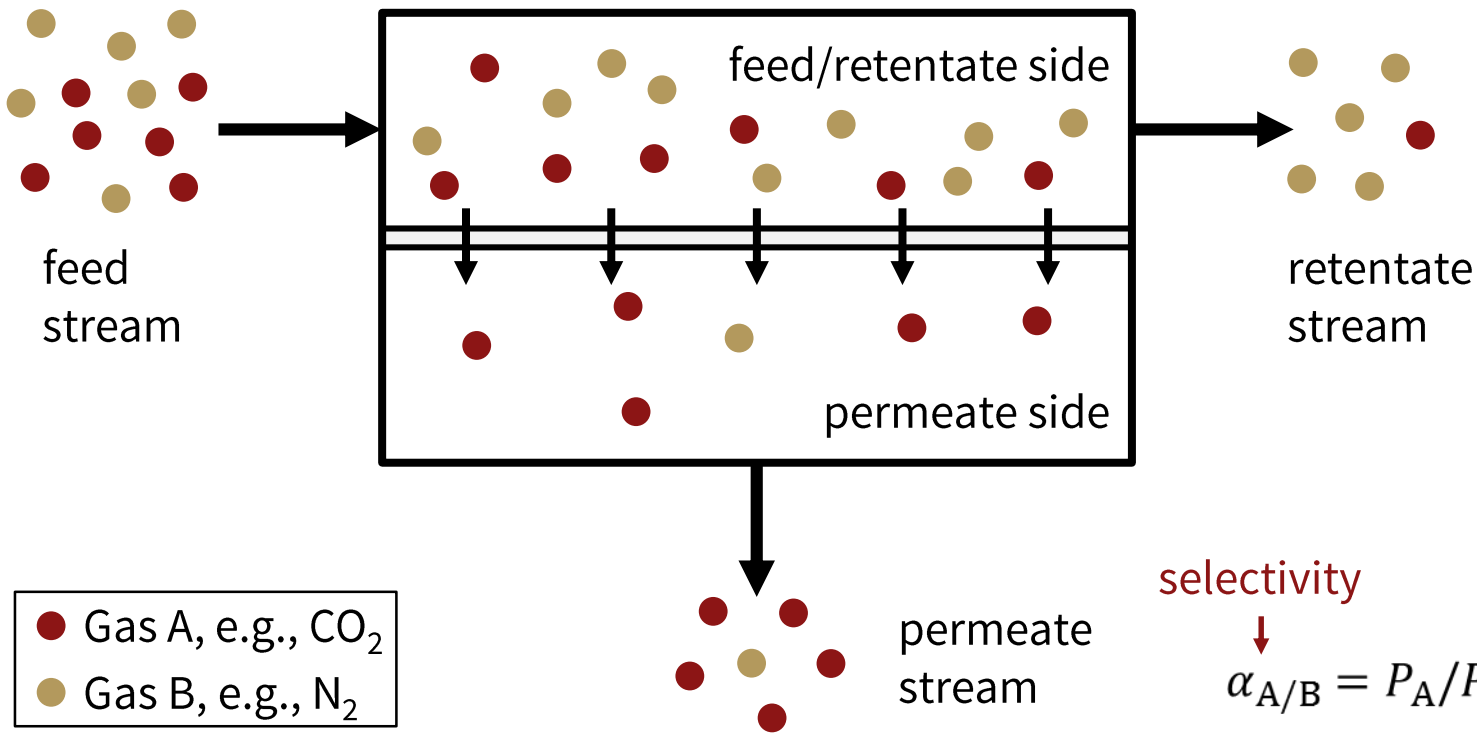

selectivity

$$\alpha_{A/B} = P_A/P_B$$

- Permeability
- Permeance
- Selectivity
- Driving force = Δ(partial pressure)

flux

permeability

Δ(partial pressure)

$$J_A = \frac{P_A}{\delta}\left(p^n_{A,feed} - p^n_{A,permeate}\right)$$

Decision variables evaluated in advanced membranes case

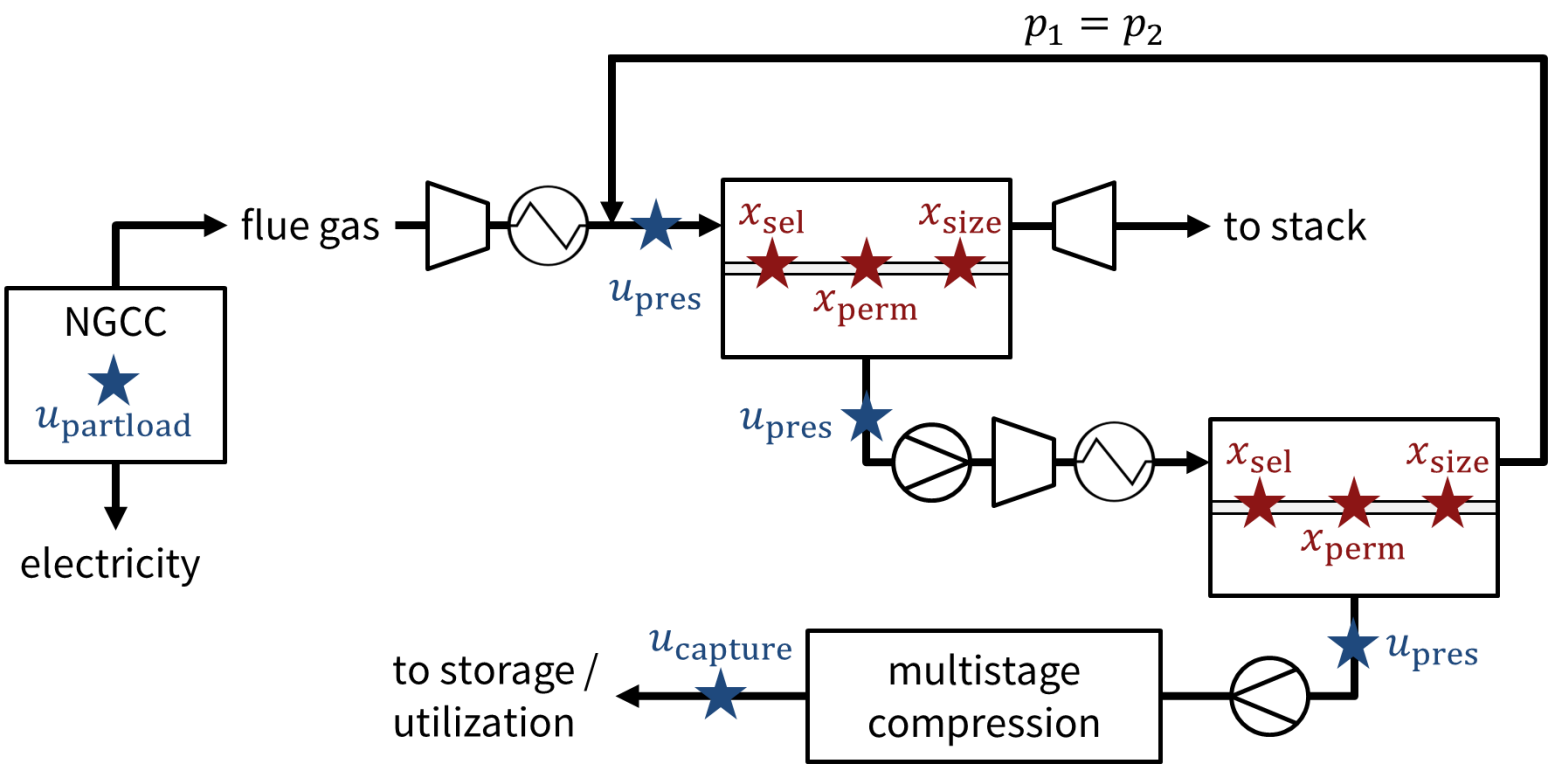

★ design decision variables

★ operational decision variables

- Varying membrane selectivity and permeance
- Focus on membrane areas

List of design decision variables, base case

Variable	Unit	Values		
1st-stage membrane selectivity	-	50		
2nd-stage membrane selectivity	-	50		
1st-stage membrane permeance	GPU*	1000		
2nd-stage membrane permeance	GPU	1000		
1st-stage membrane area	m^2	2.5×10^5	5×10^5	1×10^6
2nd-stage membrane area	m^2	5×10^3	1×10^4	2×10^4
1st-stage feed compressor size	MW	100	150	200
2nd-stage feed compressor size	MW	10	25	50
1st-stage vacuum pump size	MW	20		
2nd-stage vacuum pump size	MW	5		
Expander size (power recovery)	MW	−150		
Product compressor size (each stage)	MW	2.5		
Heat exchanger duty after 1st-stage compressor	MW	250		
Heat exchanger duty after 2nd-stage compressor	MW	50		
Product compression interstage heat exchanger duty (each stage)	MW	5		

List of design decision variables, adv. membranes case

Variable	Unit	Values	
1st-stage membrane selectivity	-	50	200
2nd-stage membrane selectivity	-	50	200
1st-stage membrane permeance	GPU	1000	3500
2nd-stage membrane permeance	GPU	1000	3500
1st-stage membrane area	m^2	1.5×10^5	5×10^5
2nd-stage membrane area	m^2	2.5×10^3	1×10^4
1st-stage feed compressor size	MW	150	
2nd-stage feed compressor size	MW	25	

Design decision variables, advanced membranes case

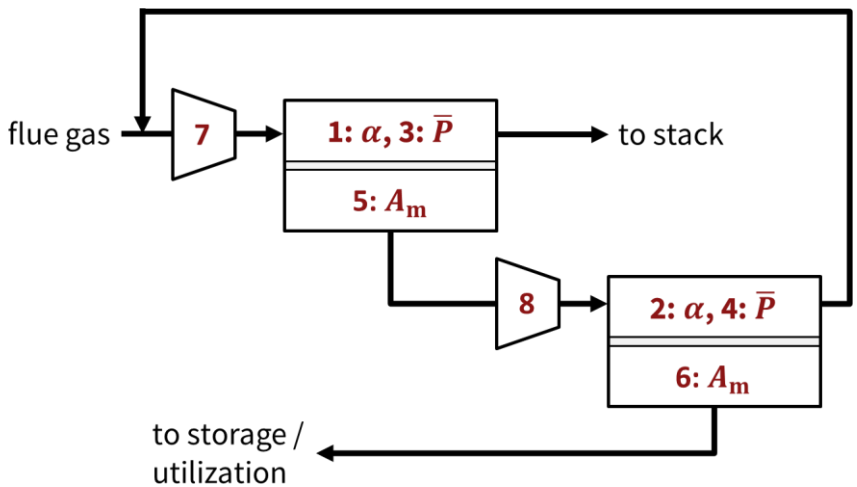

- Varying membrane properties
  - α : selectivity
  - $\bar{P}$: permeance
- Focus on membrane area
  - A_m : membrane area
- 64 design combinations, can be easily expanded

#	Variable	Unit	Values	
1	1st-stage membrane selectivity	-	50	200
2	2nd-stage membrane selectivity	-	50	200
3	1st-stage membrane permeance	GPU	1000	3500
4	2nd-stage membrane permeance	GPU	1000	3500
5	1st-stage membrane area	m^2	1.5×10^5	5×10^5
6	2nd-stage membrane area	m^2	0.25×10^4	1×10^4
7	1st-stage feed compressor size	MW	150	
8	2nd-stage feed compressor size	MW	25	

L H XS M

Results: Optimized NPVs, base case vs. advanced membranes case

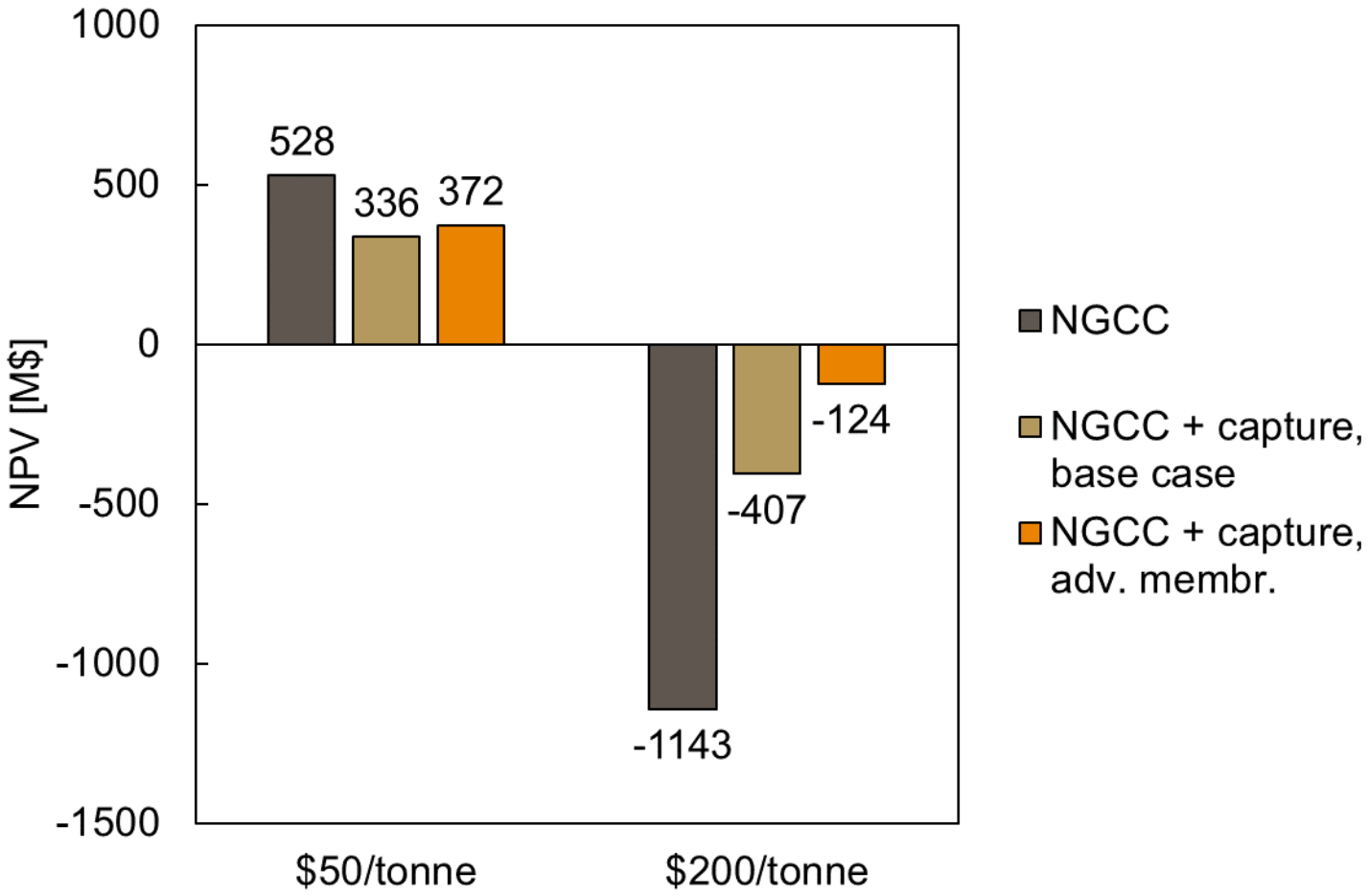

Results: Optimized design decision variables, advanced membranes case

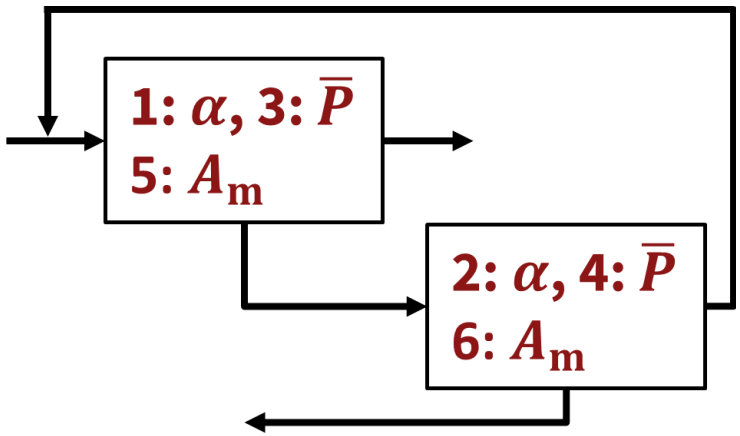

α : selectivity

$\bar{P}$: permeance

A_m : membrane area

$50/tonne

$200/tonne

design decision variables

compare: base case

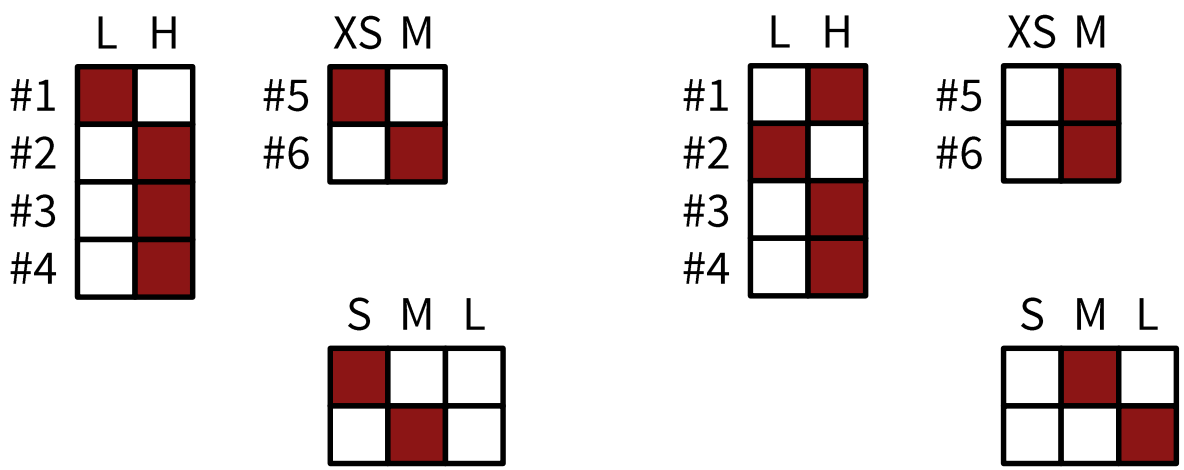

Results: Optimized partload and capture rate, carbon price = $50/tonne, advanced membranes case

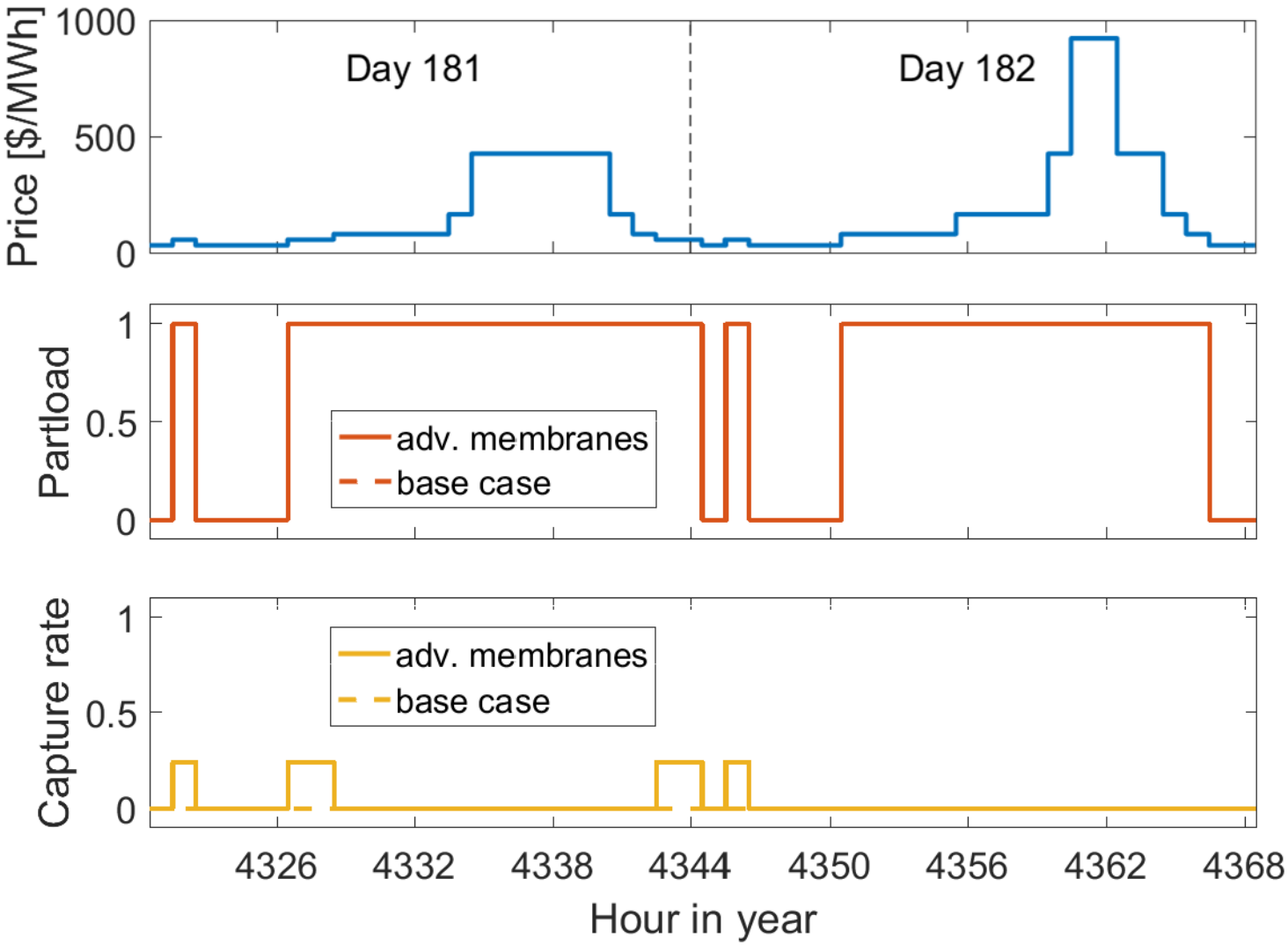

Results: Optimized partload and capture rate, carbon price = $200/tonne, advanced membranes case

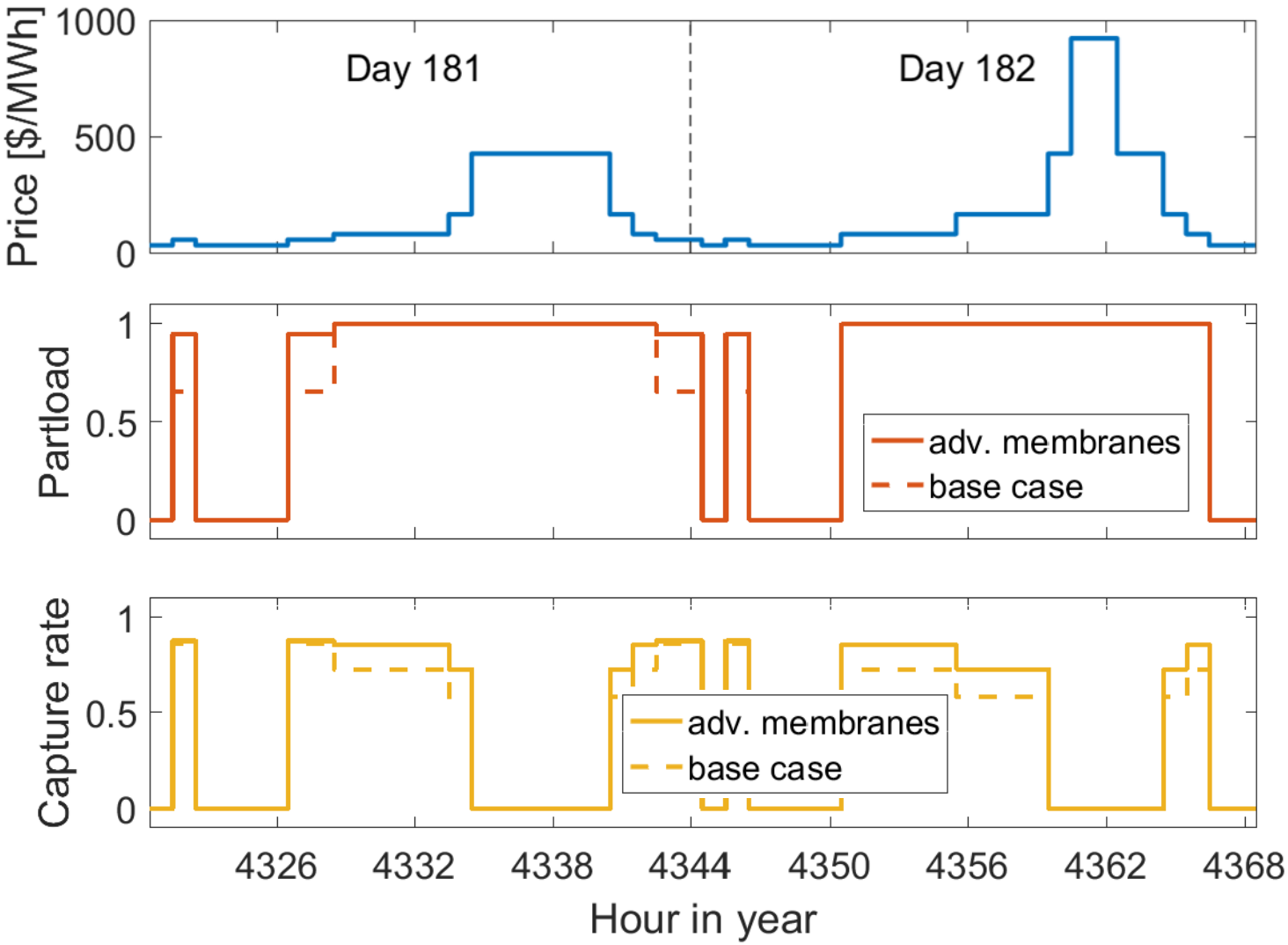

Results: Optimized operating pressures, base case

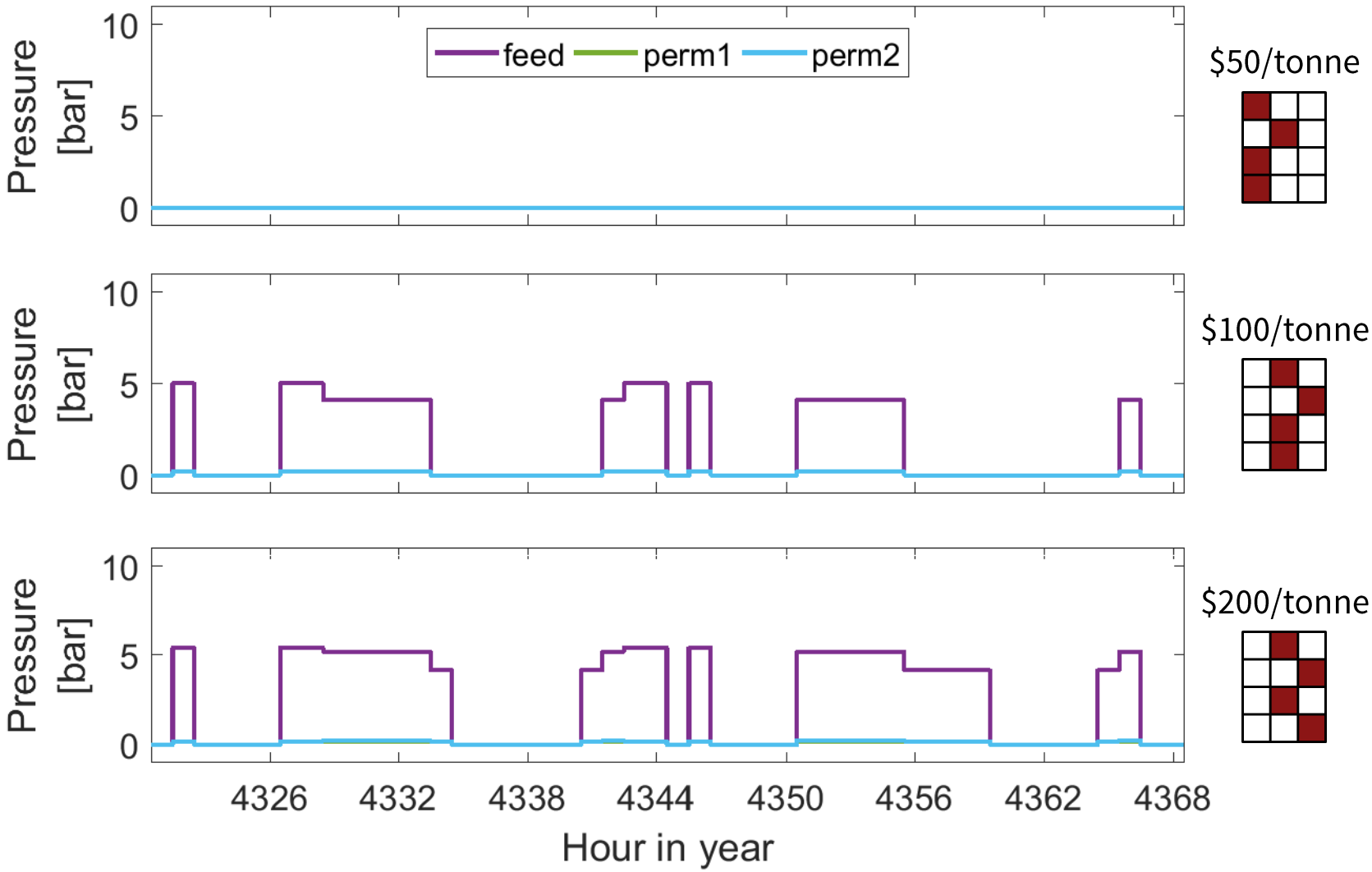

Results: Optimized operating pressures, advanced membranes case